MOEN

Buy it for looks. Buy it for life.®

Specifications

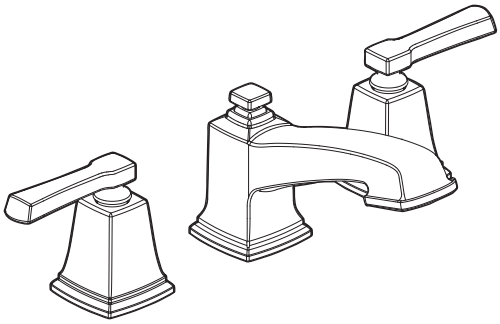

BOARDWALK™
Two-Handle Widespread Lavatory Faucet

Models: 84820 series

NOTE: SPOUT INSTALLS THROUGH 1-1/8" MIN. DIA. HOLE. VALVES INSTALL THROUGH 1-1/8" MIN. DIA. HOLE.

DESCRIPTION
- Component construction with various finishes identified by suffix
- 1/2" IPS connections
- Includes non-metal pop-up waste assembly

OPERATION
- Lever style handles
- Hot side counterclockwise to open (clockwise to close)
- Cold side clockwise to open (counter-clockwise to close)

FLOW
- Aerator is limited to 1.5 gpm max (5.7 L/min)

CARTRIDGE
- 1224 cartridge design
- Nonmetallic and stainless steel material

STANDARDS
- Third party certified to ASME A112.18.1/CSA B125.1 and all applicable requirements referenced therein
- Certified to ANSI/NSF 61/9
- Contains no more than 0.25% weighted average lead content
- Complies with California Proposition 65 and with the Federal Safe Drinking Water Act
- **ADA** for lever handles

WARRANTY
- Lifetime limited warranty against leaks, drips and finish defects to the original consumer purchaser
- 5 year warranty if used in commercial installations

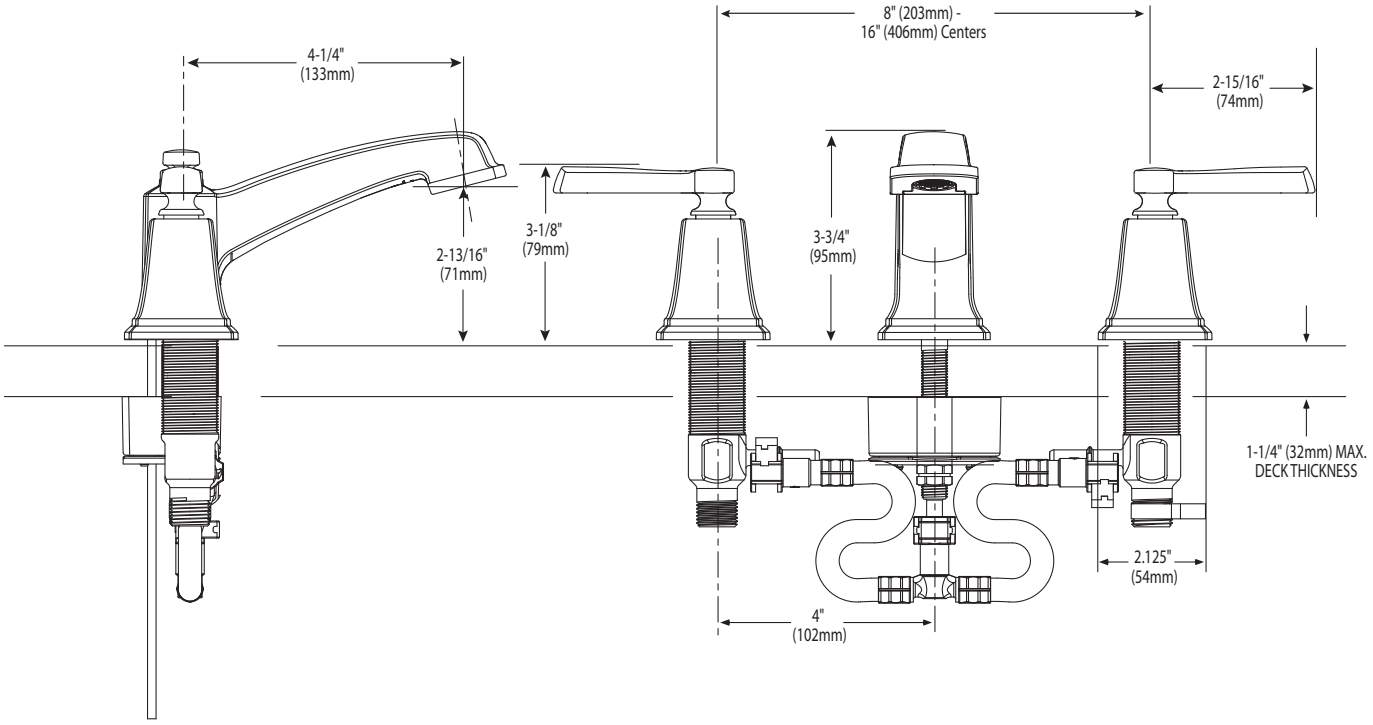

CRITICAL DIMENSIONS

(DO NOT SCALE)

FOR MORE INFORMATION CALL: 1-800-BUY-MOEN
www.moen.com

07/14/2011 SPC 53690
Release 0.00