61” CAST IRON SLIPPER TUB

Cat. No.
CTSH60

BARCLAY

L: 61 1/4”
W: 30 1/4”
H: 21 1/2” & 31” (from floor to top of tub)
15 1/2” & 23 3/4” (from bottom of tub to top of tub)

The following is recommended for CTSH60 tubs with deck holes:
- Rim-mounted faucet: part **#4601**
- Complete shower unt: part# **4063**
- Straight bath supplies: part **#5577**
- Leg tub drain: part **#5599**

Do Not use with rigid, freestanding supplies.

Gallon Capacity:	43
Shipping Weight:	500 lbs.
Empty Weight:	300 lbs.
Filled Weight:	659 lbs.

Features:

- ►Inside finish is white enamel
- ►Cats Iron ball and claw feet available in 6 finishes or unfinished
- ►Tub exterior is white (epoxy)
- ►7” centers in tub deck
- ►Non-skid strips
- ►Feet attached and leveled before shipment
- ►Tub is thoroughly inspected before shipment

Foot Finishes:
BP Polished Brass
CP Polished Chrome
PN Polished Nickel
SN Brushed Nickel
WH White
ORB Oil-rubbed Bronze

Meets or exceeds the following specifications: A112-19-1M 1994.

Extra Paint Charge (inside of tub is always white enamel):
Bisque Paint - $160 **Black Paint** - $160
Bathtubs painted in bisque or black are considered “special order” and are not returnable.

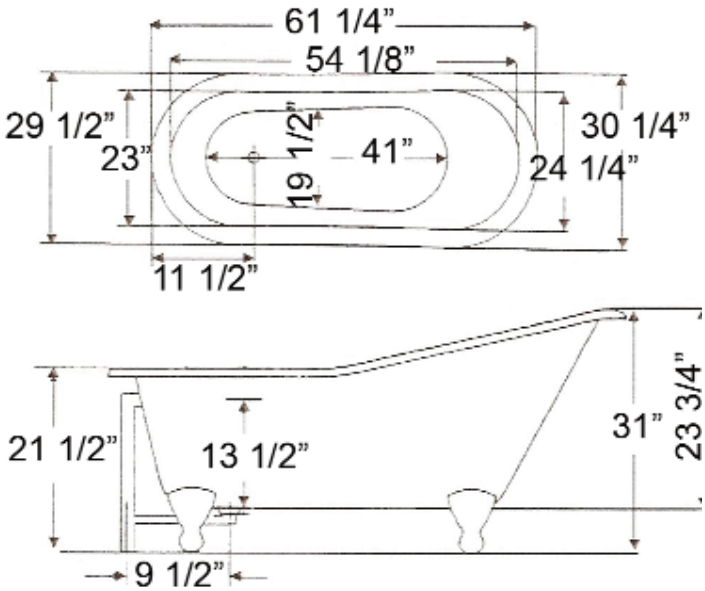

Dimensions of fixture are nominal and may vary within the range of tolerances established by ANSI Standard A112.19.1M. Dimensions and specifications subject to change without notice.