# KB6151,2,8ALL
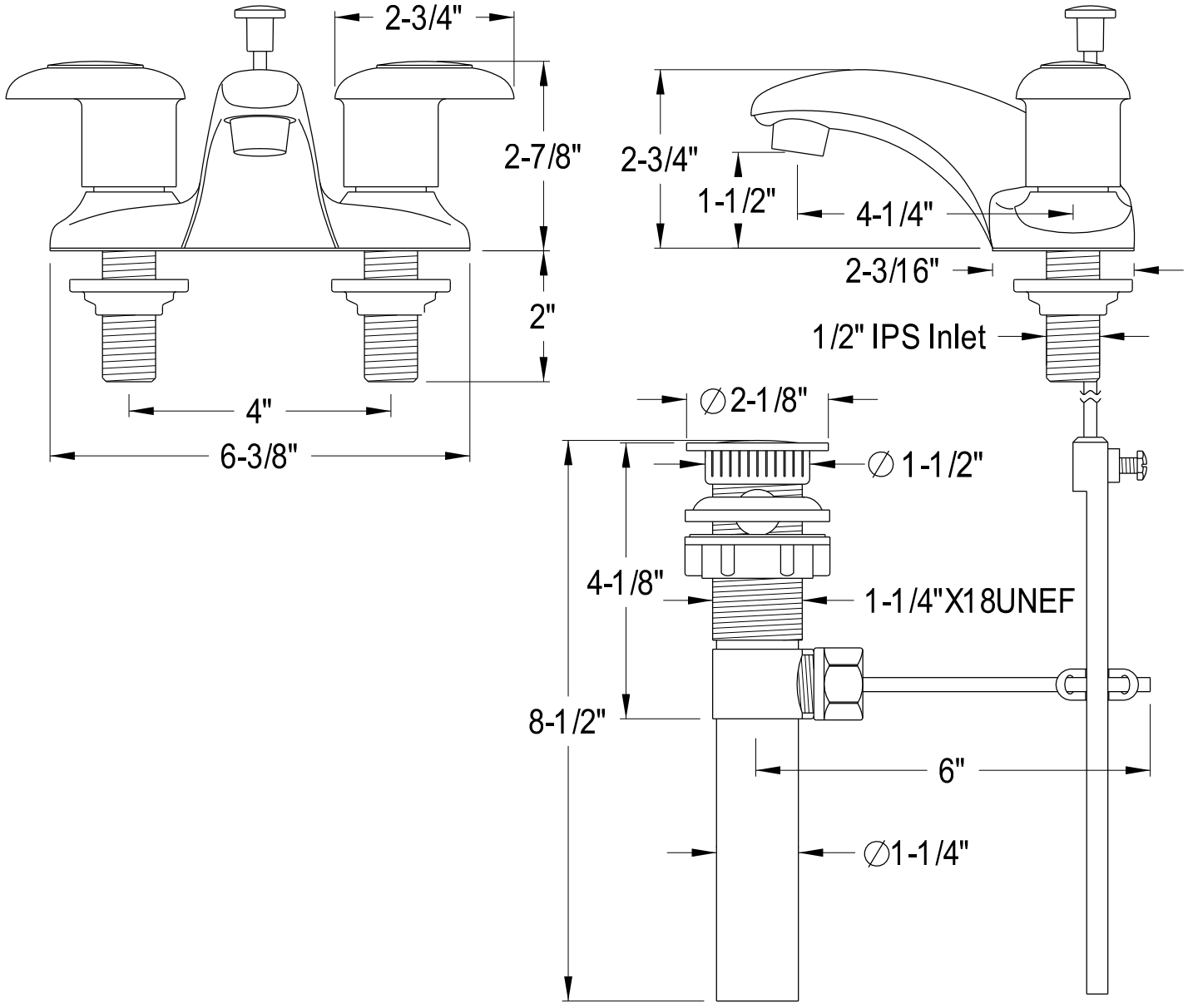
Twin Handles 4" Centerset Lavatory Faucet With Plastic Pop-Up