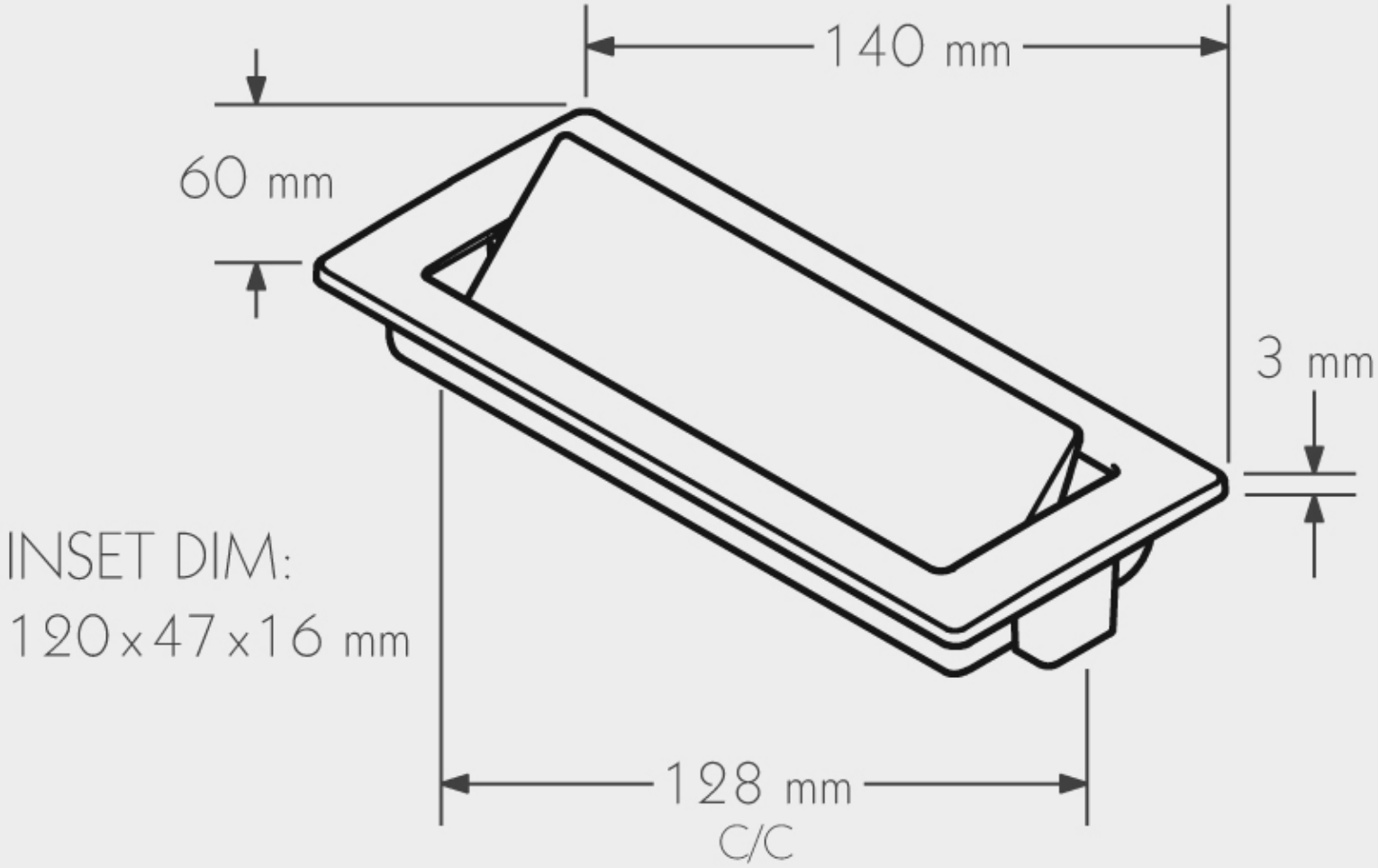
140 mm
60 mm
3 mm
INSET DIM:
120 x 47 x 16 mm
128 mm
C/C