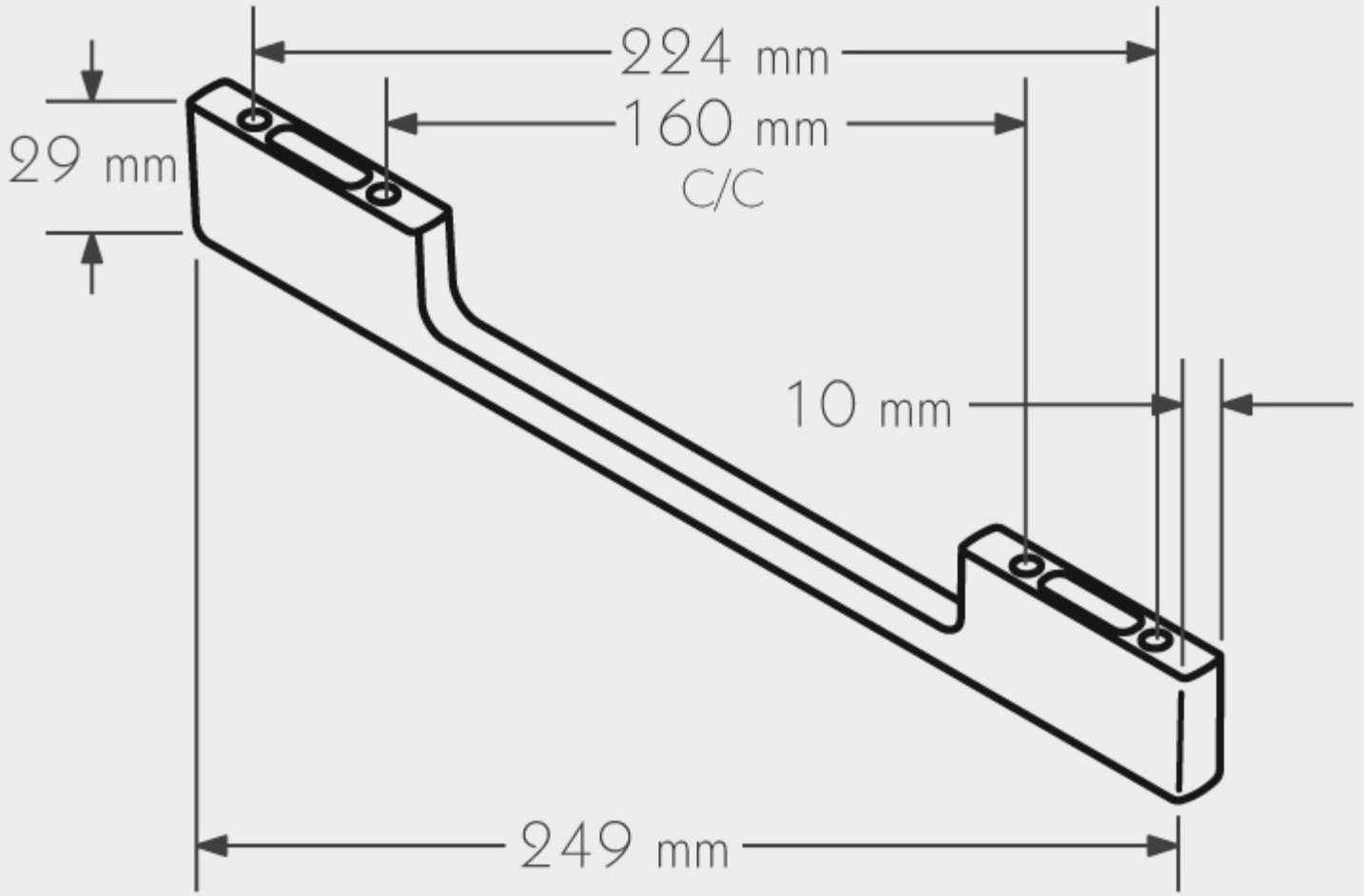
224 mm
160 mm
C/C
29 mm
10 mm
249 mm