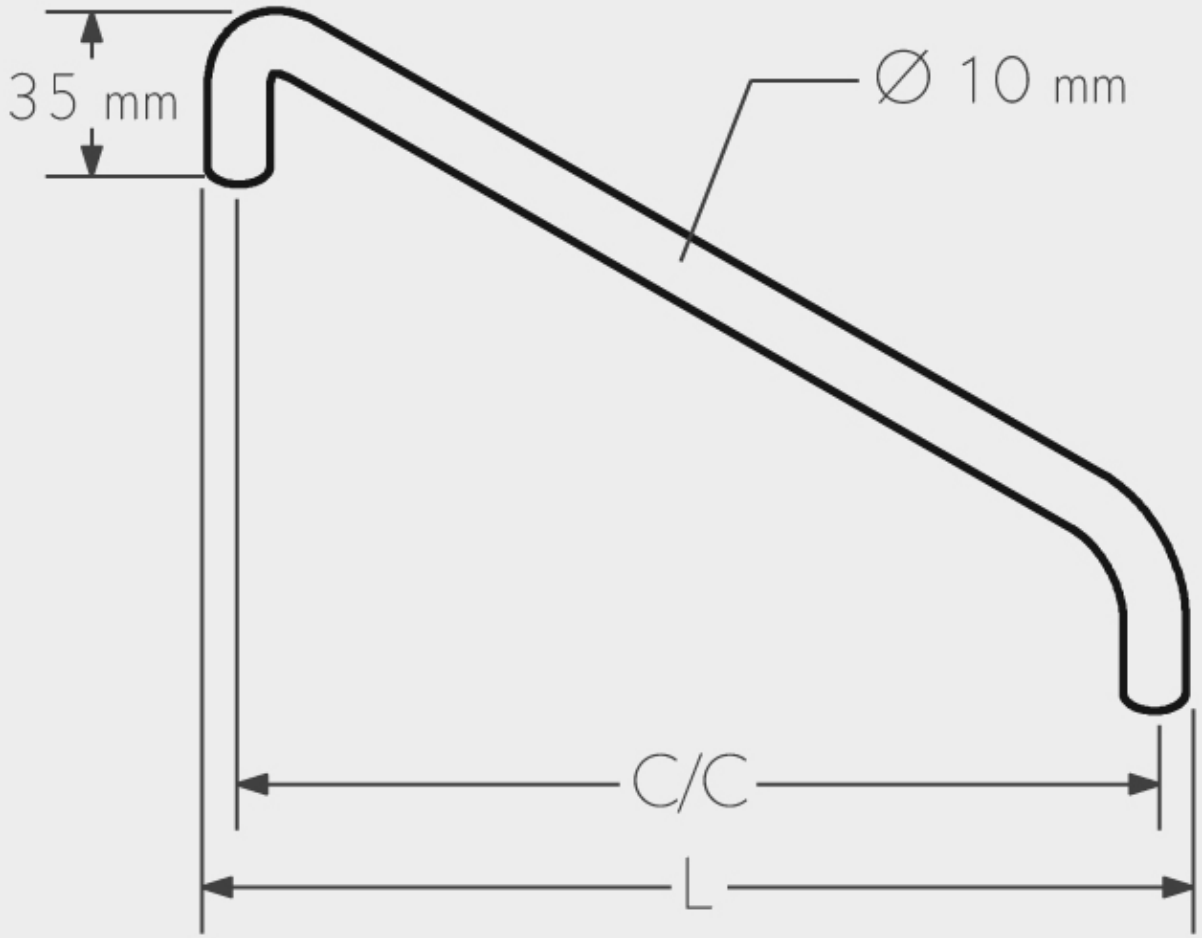

C/C:96mm; L:106mm
C/C:128mm; L:138mm
C/C:160mm; L:170mm
C/C:192mm; L:202mm
C/C:256mm; L:266mm
C/C:320mm; L:330mm