Premier Copper Products

ITEM # BRECDB2
RECTANGLE
BAR/PREP

OUTER DIMENSIONS: 17"X12"X7"
INNER DIMENSIONS: 15"X10"X7"
DRAIN SIZE: 2"

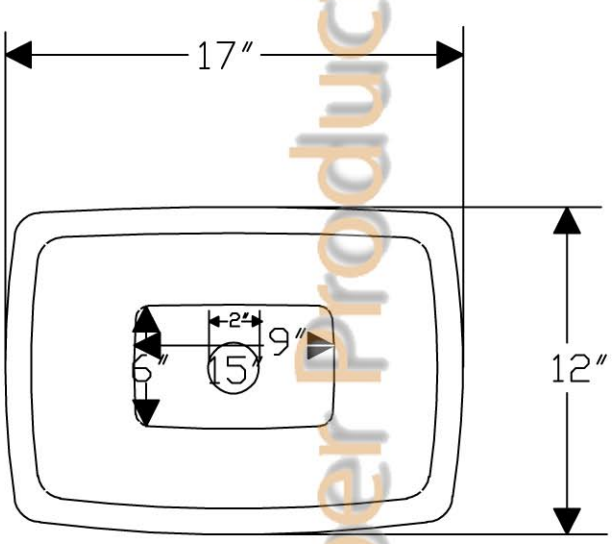

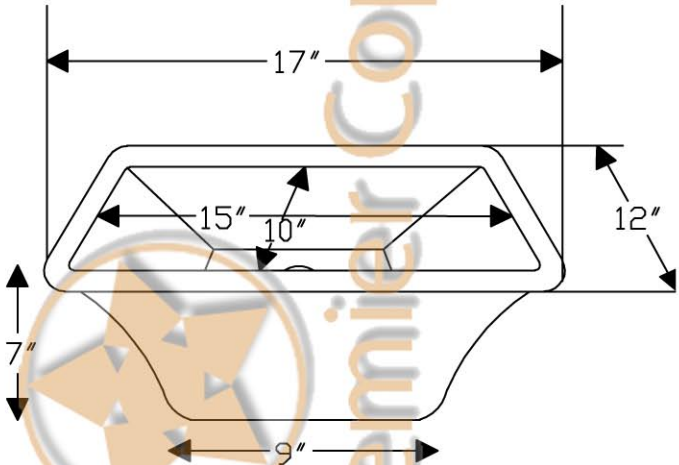

Premier Copper Products