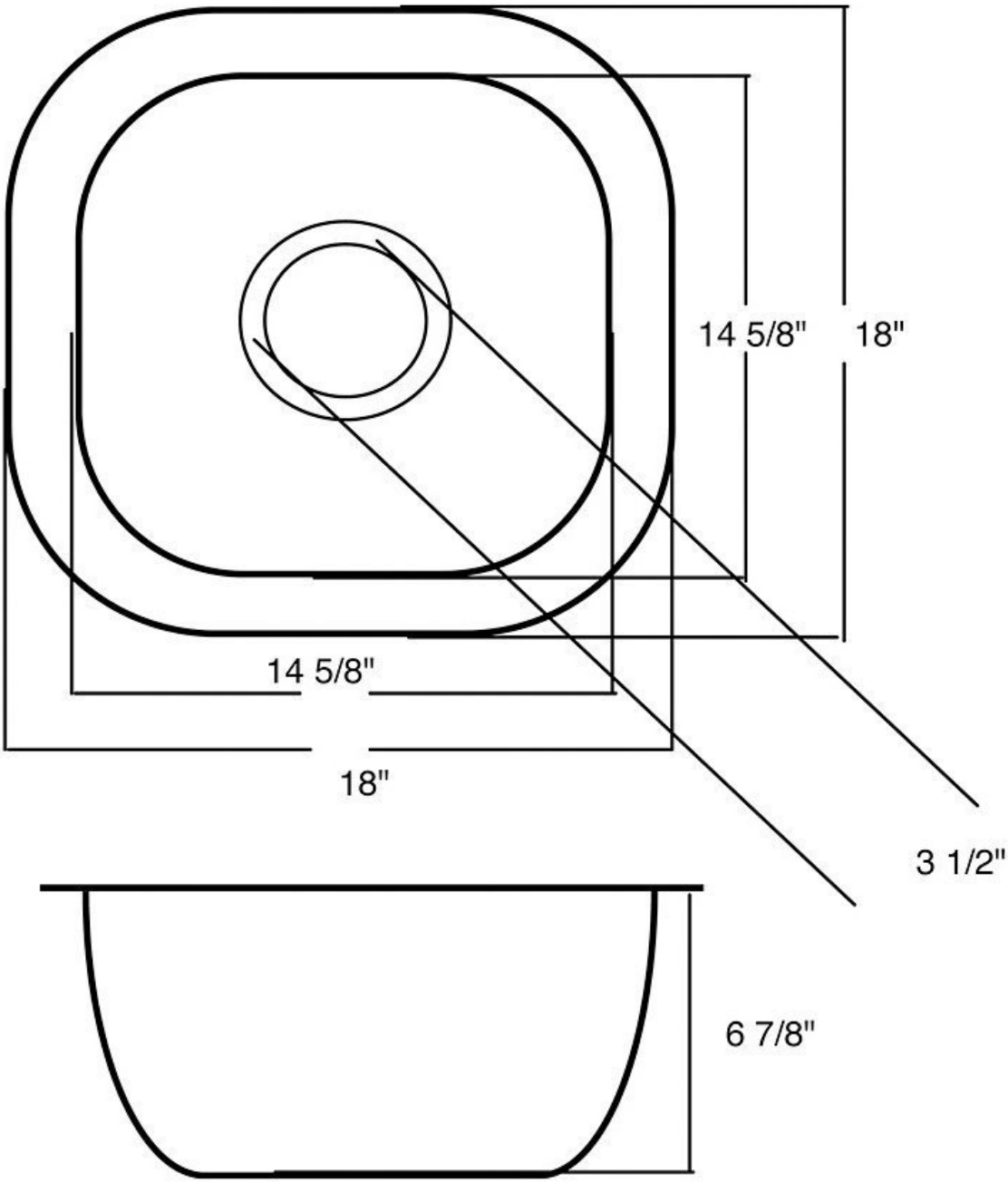
14 5/8"
18"
14 5/8"
18"
3 1/2"
6 7/8"