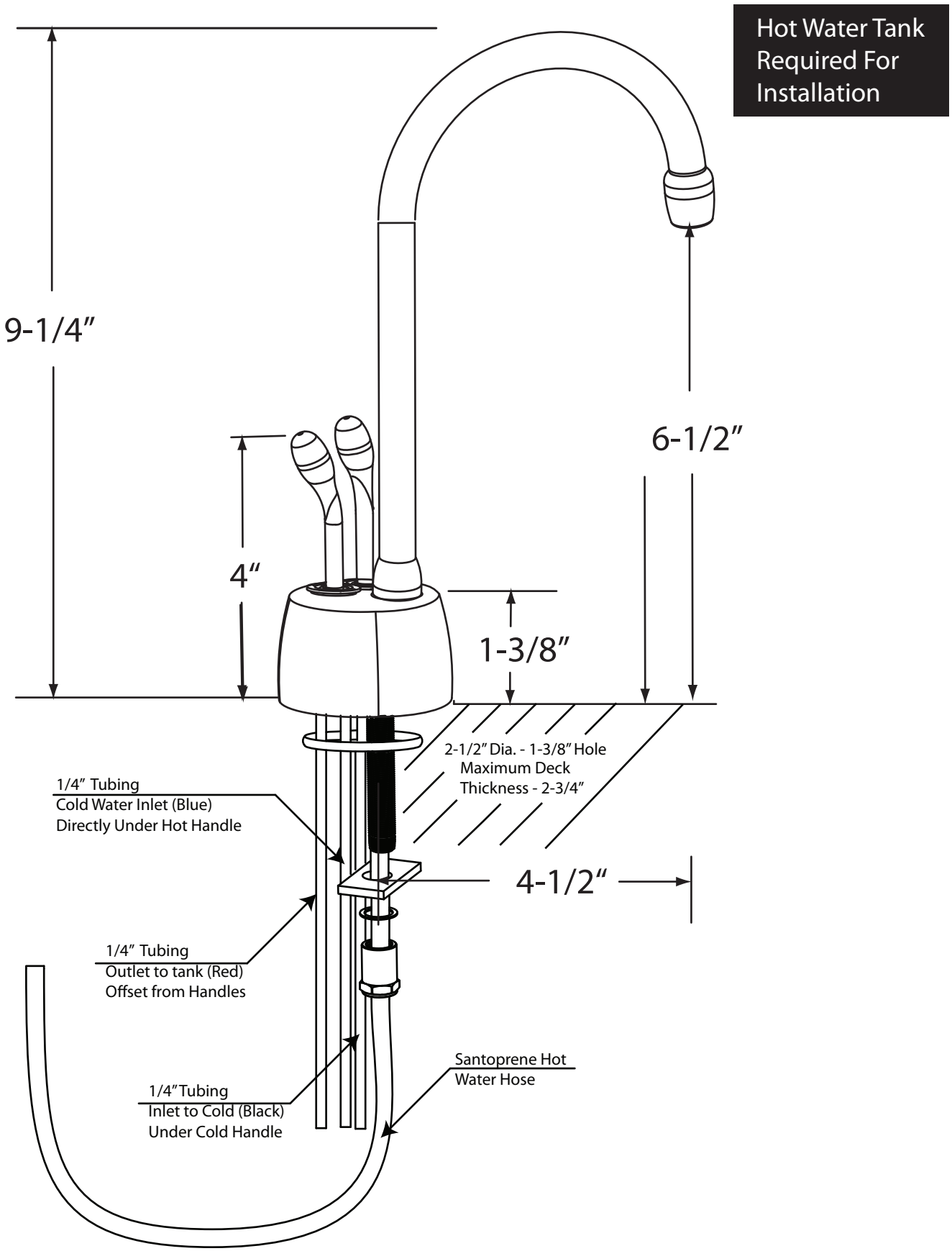| PART NO. D272 | SPECIFICATION SHEET | Brass Develosah Instant Hot and Cold Water Faucet |
|---|---|---|