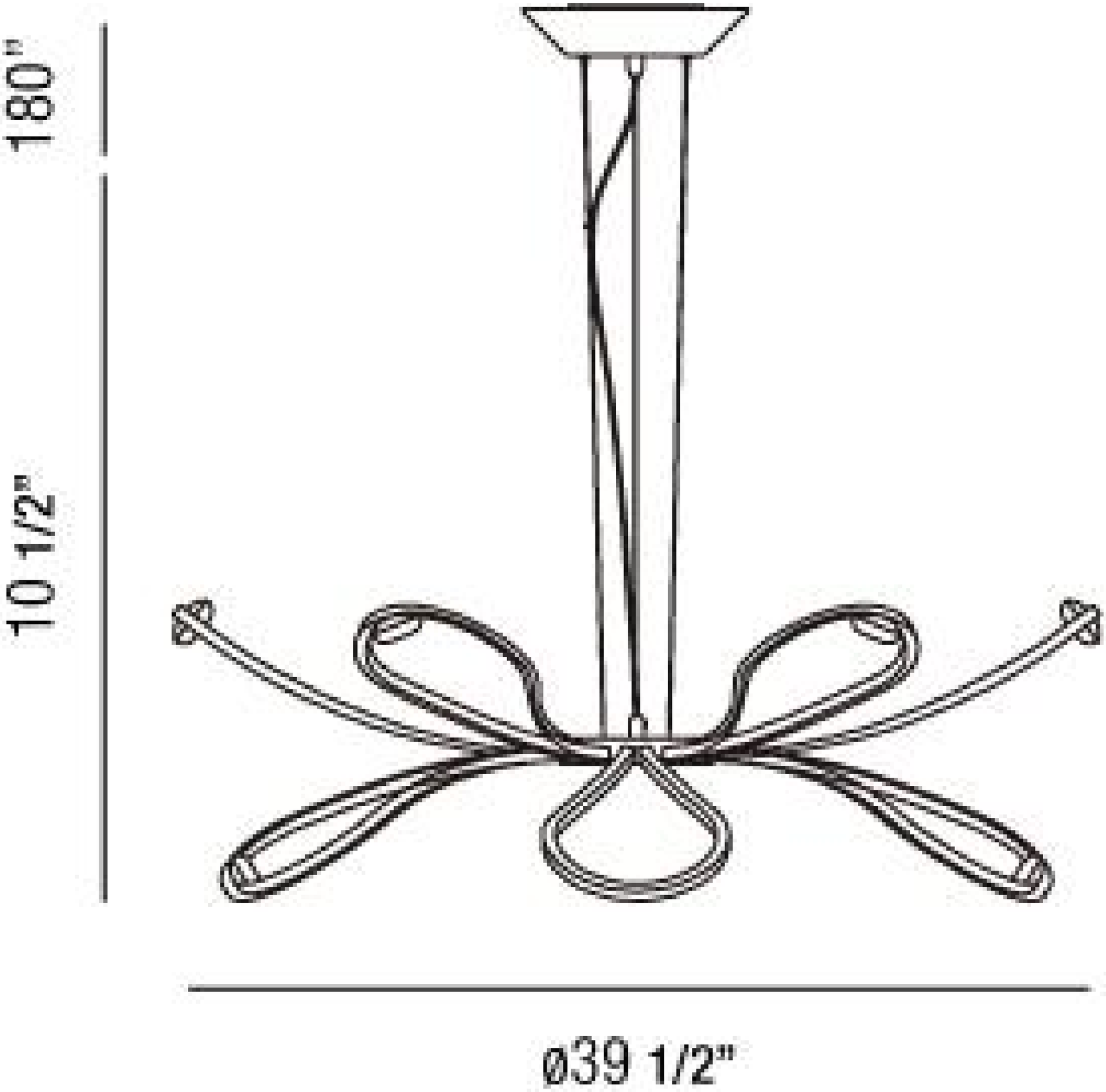
180"
10 1/2"
ø39 1/2"