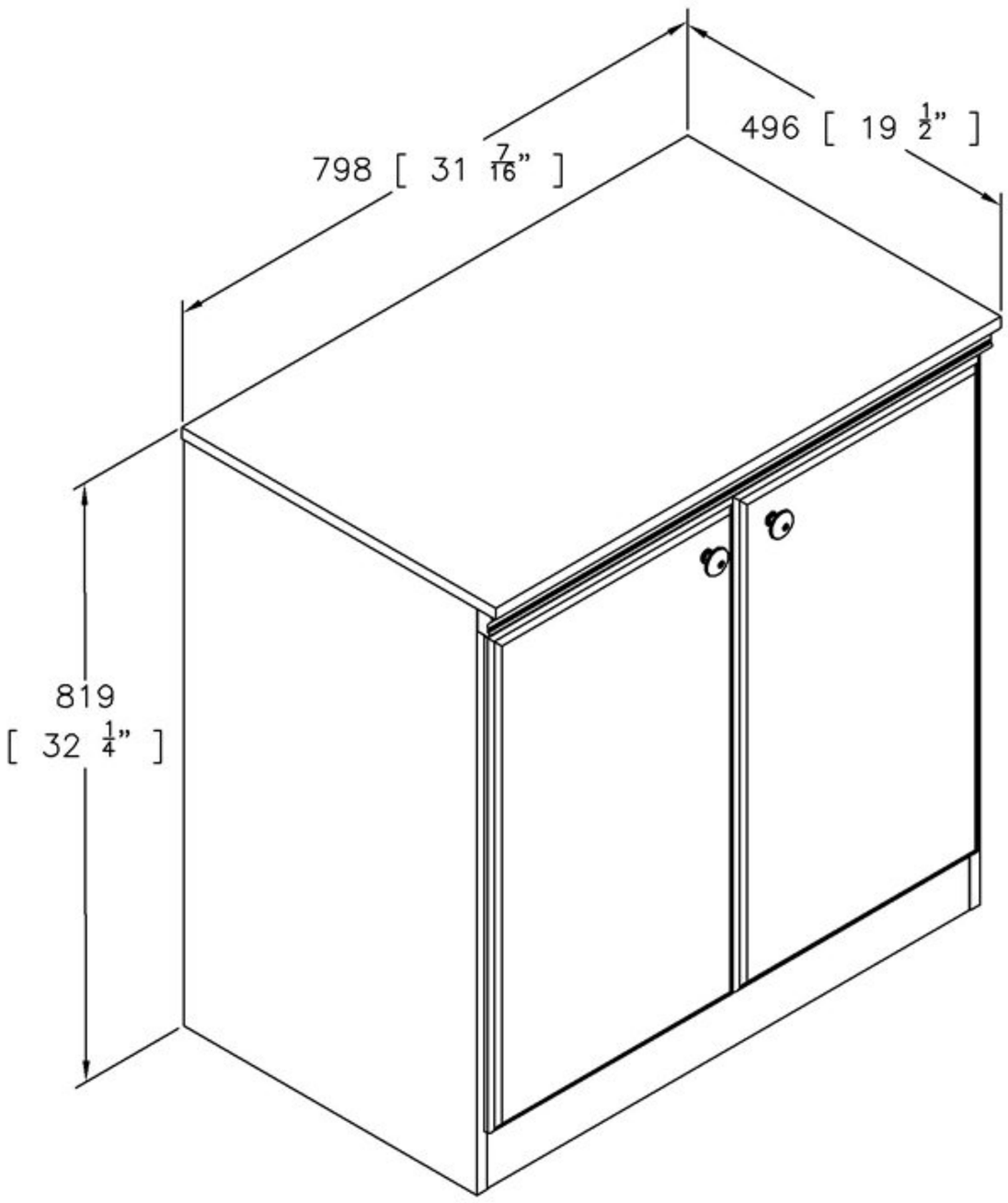
798 [31 7/16"]
496 [19 1/2"]
819
[32 1/4"]

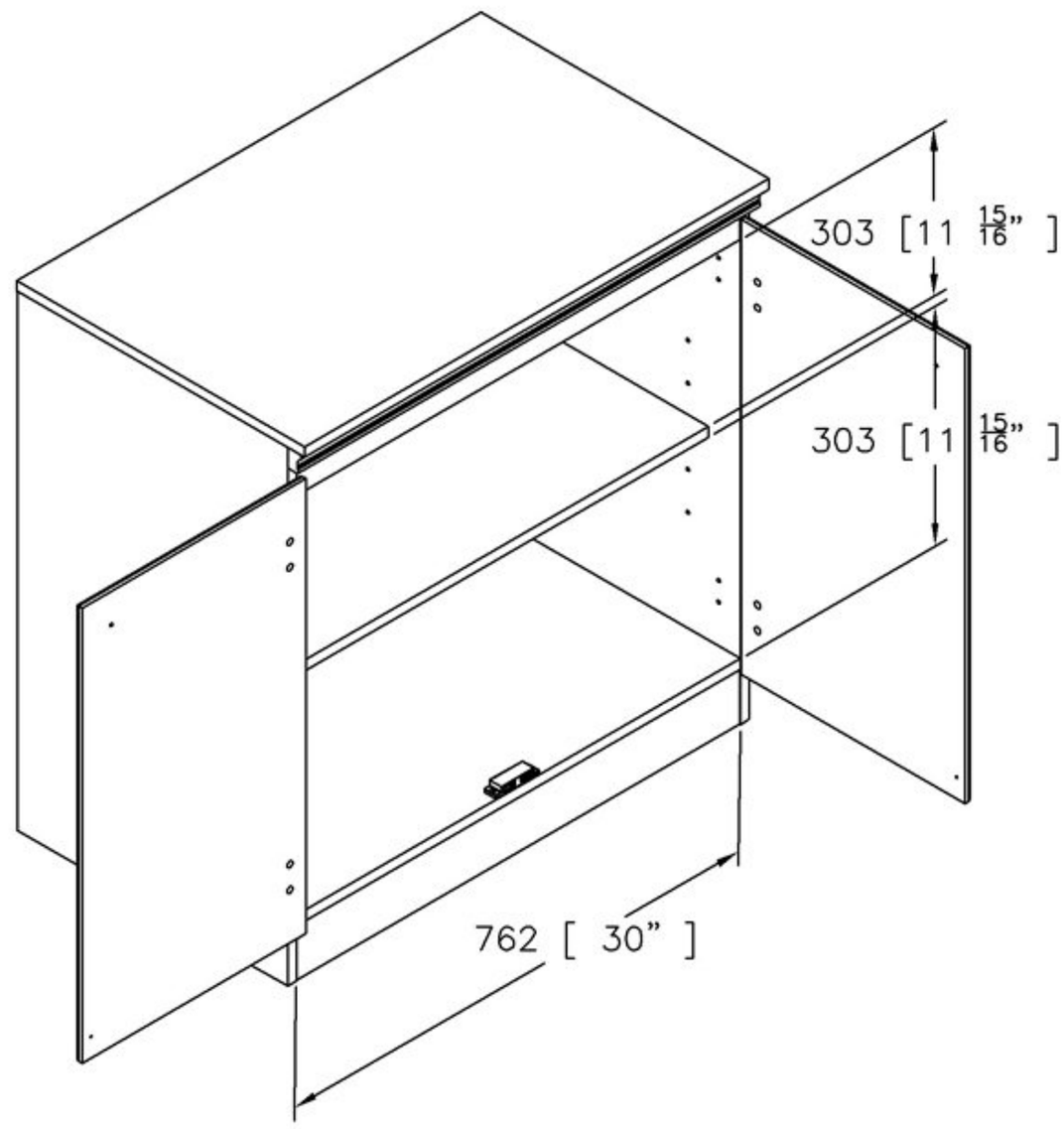
303 [11 15/16"]
303 [11 15/16"]
762 [30"]