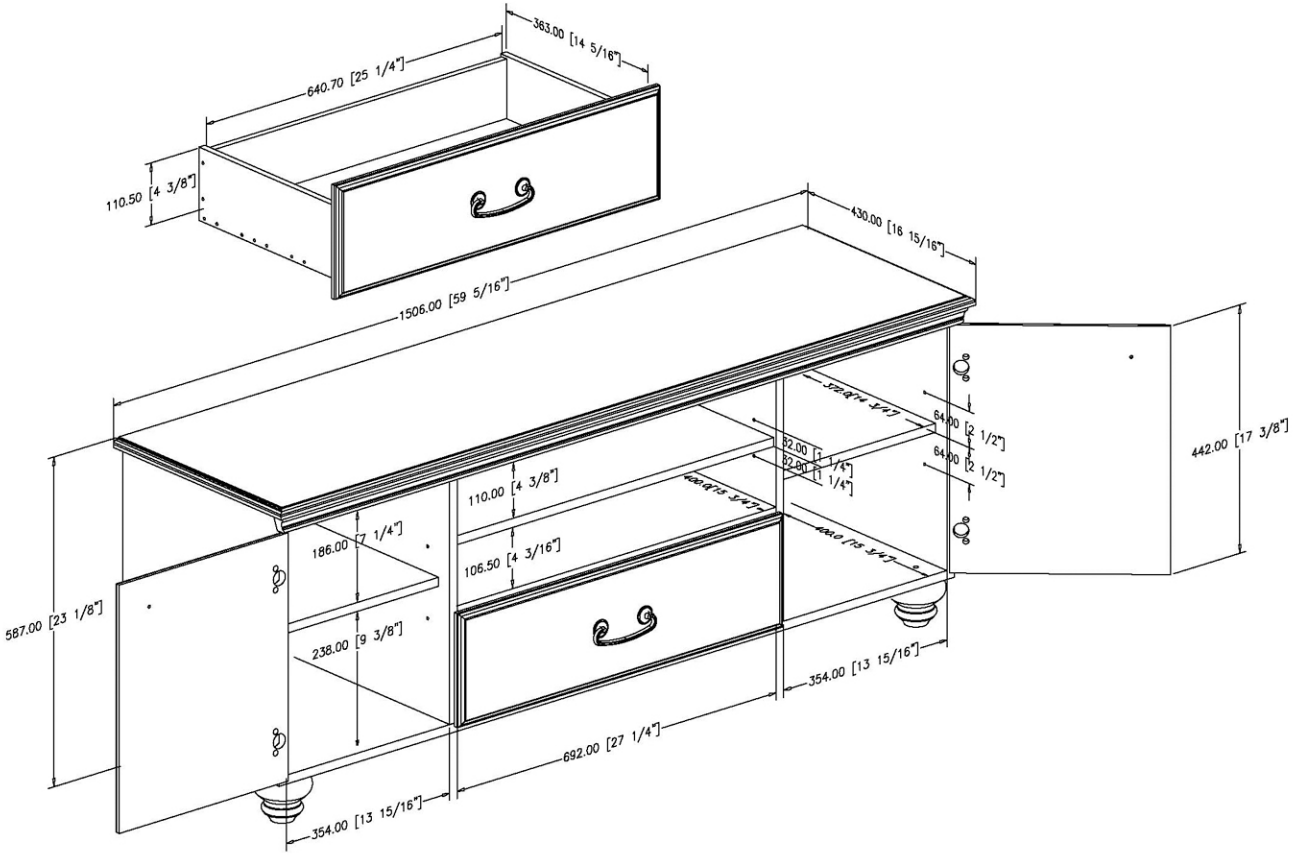
363.00 [14 5/16"]
640.70 [25 1/4"]
110.50 [4 3/8"]
430.00 [16 15/16"]
1506.00 [59 5/16"]
442.00 [17 3/8"]
64.00 [2 1/2"]
64.00 [2 1/2"]
32.00 [1 1/4"]
32.00 [1 1/4"]
110.00 [4 3/8"]
106.50 [4 3/16"]
186.00 [7 1/4"]
238.00 [9 3/8"]
587.00 [23 1/8"]
354.00 [13 15/16"]
692.00 [27 1/4"]
354.00 [13 15/16"]