American Standard

BARRIER FREE

TRIANGLE CADET® 3 RIGHT HEIGHT® ROUND FRONT TOILET

VITREOUS CHINA

TRIANGLE CADET® 3 RIGHT HEIGHT® ROUND FRONT TOILET

❑ **270BD.001**
- Features the **Cadet® Flushing System**
- Vitreous china
- Low consumption (6.0 Lpf/1.6 gpf) toilet
- PowerWash® rim scrubs bowl with each flush
- Includes color match bowl caps
- EverClean® surface included
- 3" flush valve
- 2-1/8" trapway
- 16-1/2" rim height for accessible applications
- 12" (305mm) rough-in
- Generous 9" x 8" water surface area
- Color matched trip lever is supplied
- 5 year warranty

❑ **3717B.001** Right Height® Round Front Bowl
❑ **4338.001** Triangle Cadet 3 Tank

Nominal Dimensions:
843 x 492 x 815mm (33-3/16" x 19-3/8" x 32-1/16")

Fixture only, seat and supply sold separately

Compliance Certifications -
Meets or Exceeds the Following Specifications:
- ASME A112.19.2-2008/CSA B45.1-08 for Vitreous China Fixtures

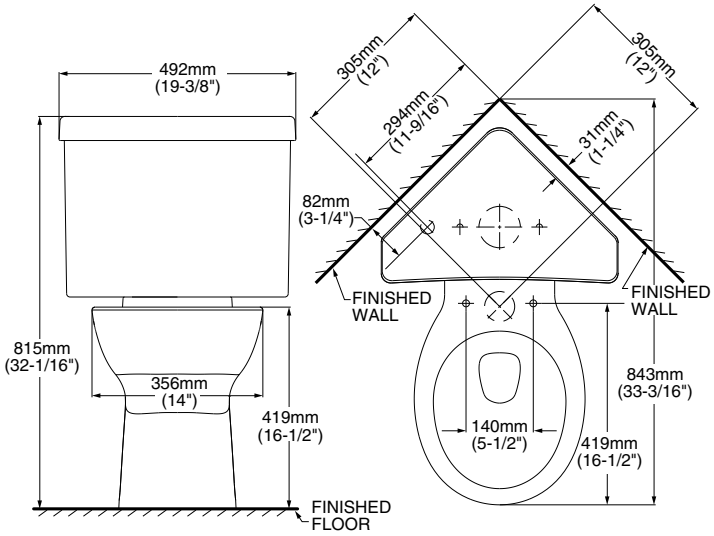

To Be Specified:
❑ Color: ❑ White ❑ Bone ❑ Linen
❑ Seat: #5320.110 EverClean® Round Front Seat with Slow Close Snap-Off Hinges
❑ Supply with stop:

NOTES:
THIS TOILET IS DESIGNED TO ROUGH-IN AT A MINIMUM DIMENSION OF 305MM (12") FROM FINISHED WALL TO C/L OF OUTLET.
SUPPLY NOT INCLUDED WITH FIXTURE AND MUST BE ORDERED SEPARATELY.
* DIMENSION SHOWN FOR LOCATION OF SUPPLY IS SUGGESTED.

IMPORTANT: Dimensions of fixtures are nominal and may vary within the range of tolerances established by ANSI Standard A112.19.2.
These measurements are subject to change or cancellation. No responsibility is assumed for use of superseded or voided pages.

MEETS THE AMERICANS WITH DISABILITIES ACT GUIDELINES AND ICC ANSI A117.1 REQUIREMENTS FOR ACCESSIBLE AND USABLE BUILDING FACILITIES-CHECK LOCAL CODES.

CADET® 3 Flushing System

© 2015 AS America Inc.