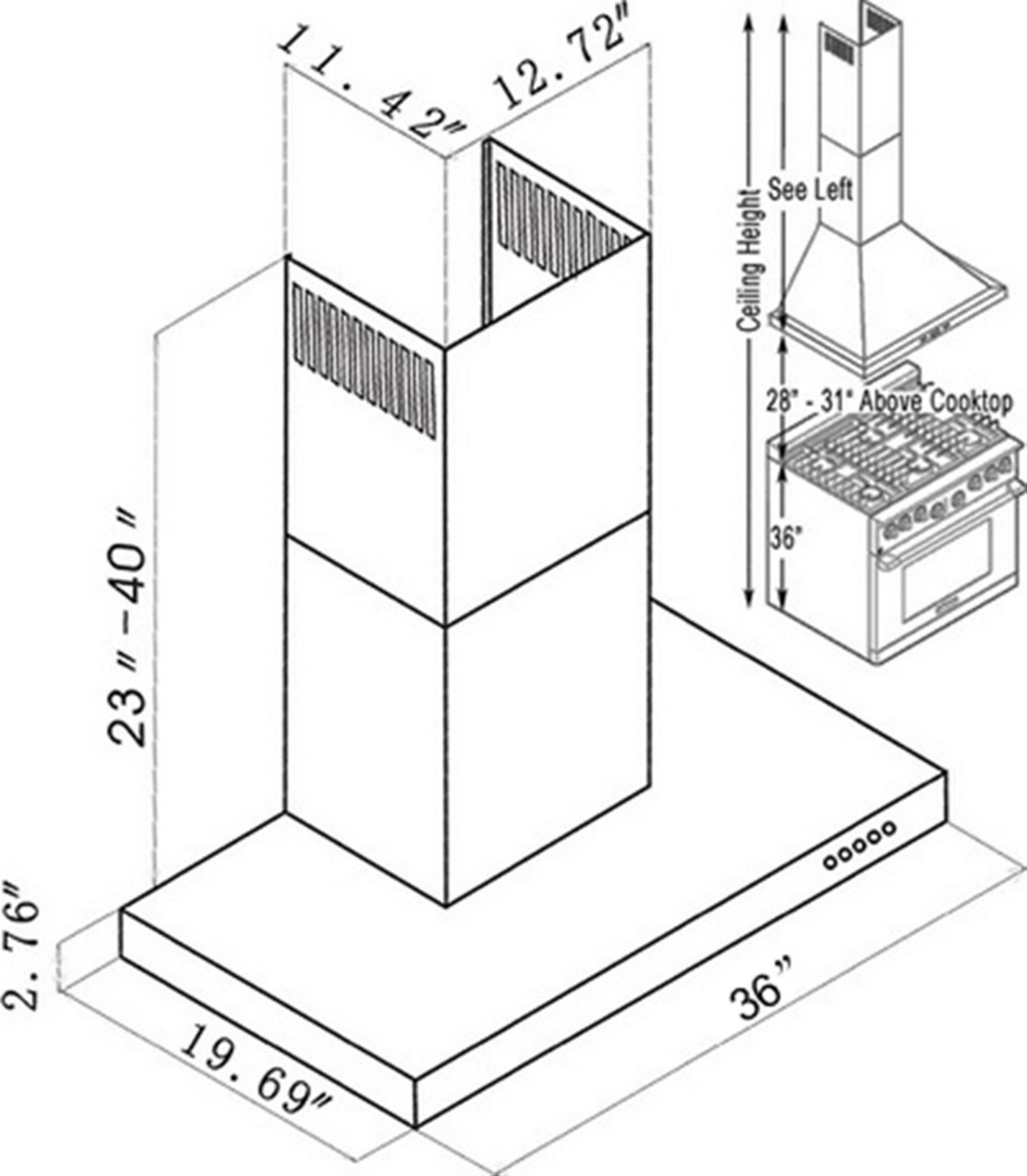
11.42"
12.72"
23" - 40"
2.76"
19.69"
36"
Ceiling Height
See Left
28" - 31" Above Cooktop
36"