Specification Sheet

Belarus 48” Vanity

Mirror: 48" x27.56" inch
Cabinet: 47.2"x18.1"x35.8" in
Handle:6.3"/14.8"inch

(PLAN)

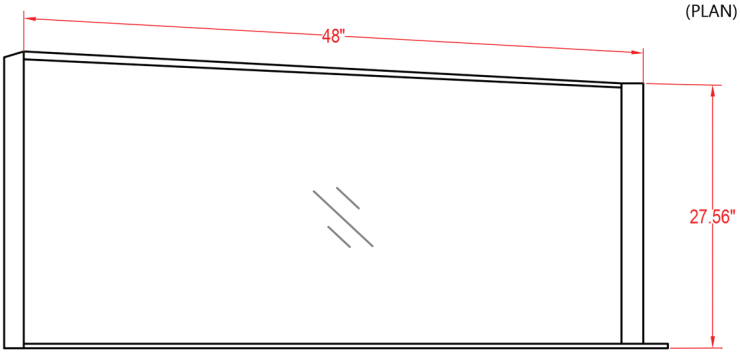

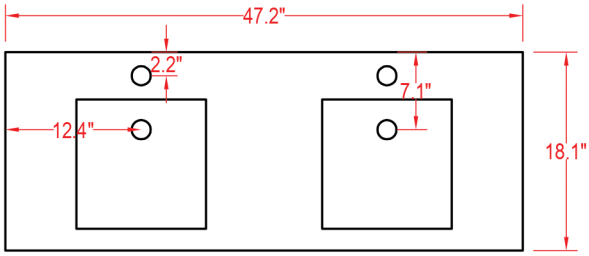

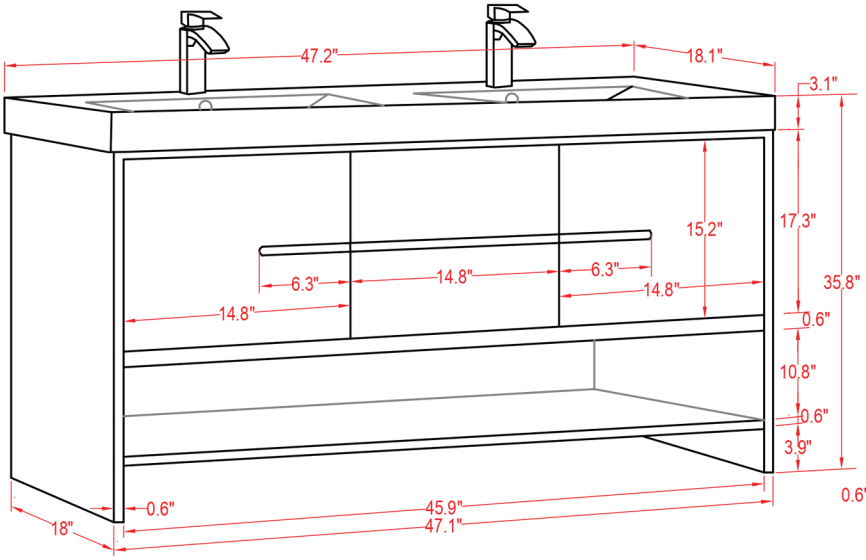

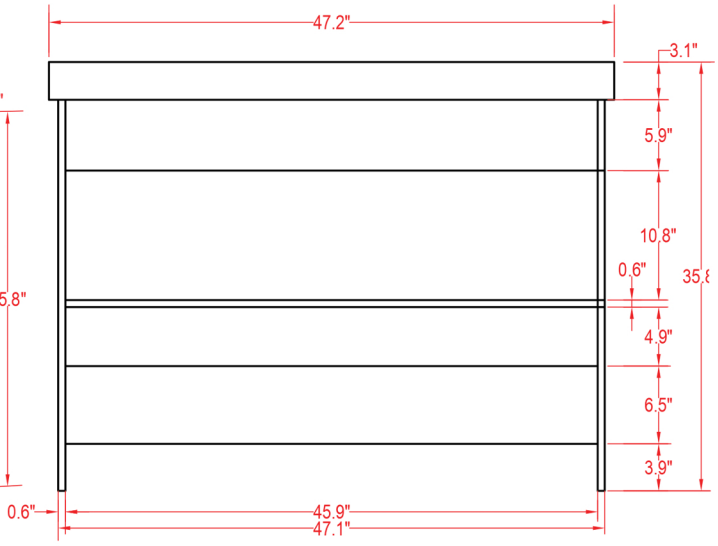

(BACK)

ALL DIMENSIONS & SPECIFICATIONS ARE APPROXIMATE & SUBJECT TO CHANGE WITHOUT NOTICE.