SHV7PT53UC, SHV68TUC, SHV53T**UC**

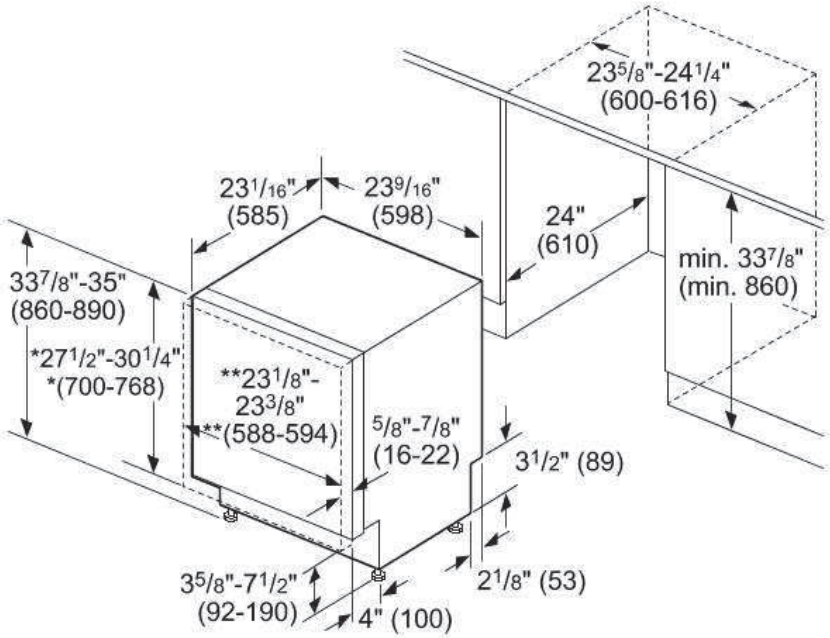

* measured from the bottom edge of the countertop panel
thickness recommended 3/4" (20 mm), panel weight 9-18 lb (4-8 kg)
** 24" (610 mm) wide panel may be used
depending on cabinet design

measurements in inches (mm)

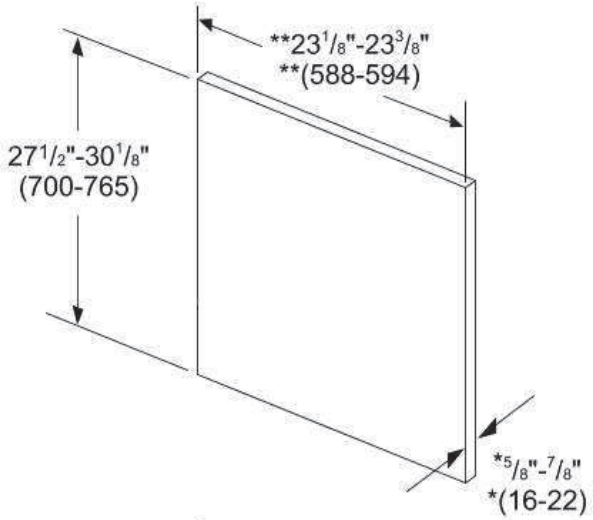

* thickness recommended 3/4" (20 mm),
panel weight 9-18 lb (4-8 kg)

** 24" (610 mm) wide panel may be used
depending on cabinet design

measurements in inches (mm)

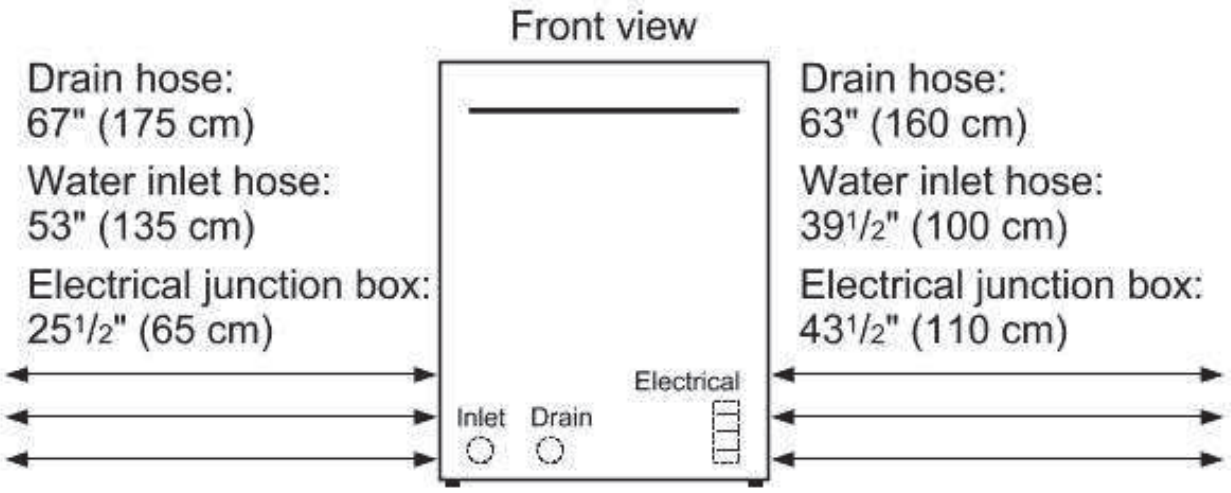

All connections in the rear of the appliance.
Extensions for drain hose and electrical cord (3 pin plug) available.