W3

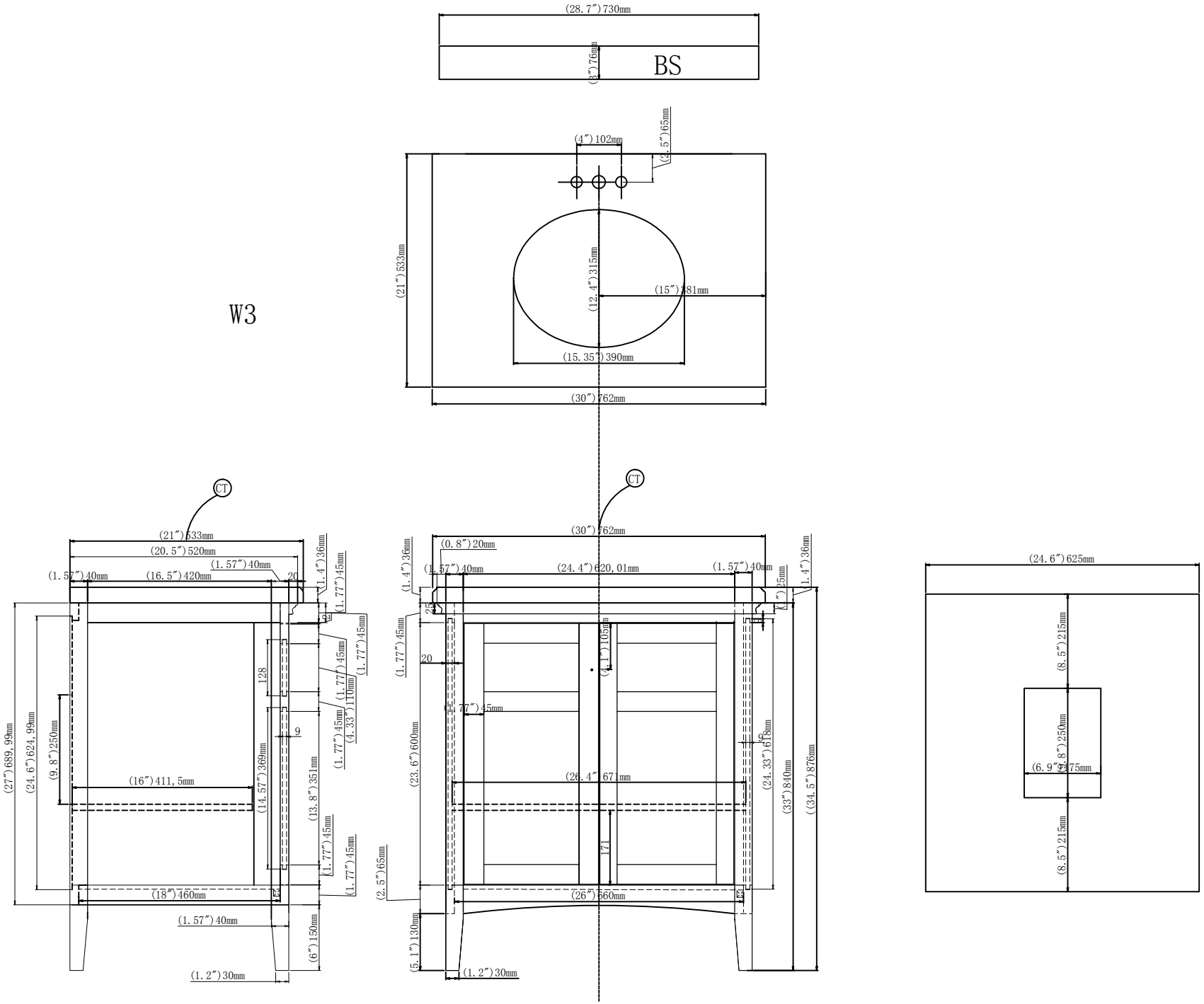
(28.7″)730mm
(3″)76mm
BS
(4″)102mm
(2.5″)65mm
(21″)533mm
(12.4″)315mm
(15″)381mm
(15.35″)390mm
(30″)762mm
CT
(21″)533mm
(20.5″)520mm
(1.57″)40mm
(16.5″)420mm
(1.4″)36mm
(1.77″)45mm
(4.33″)110mm
(27″)689.99mm
(24.6″)624.99mm
(9.8″)250mm
(16″)411.5mm
(14.57″)369mm
(13.8″)351mm
(18″)460mm
(6″)150mm
(1.2″)30mm
(30″)762mm
(0.8″)20mm
(24.4″)620.01mm
(4.1″)105mm
(23.6″)600mm
(26.4″)671mm
(24.33″)618mm
(33″)840mm
(34.5″)876mm
(2.5″)65mm
(26″)660mm
(5.1″)130mm
(24.6″)625mm
(8.5″)215mm
(6.9″)175mm