LAUREL MOUNTAIN WHIRLPOOLS

DROP IN I PLUS

DROP IN I PLUS	WHIRLPOOL	4260DPW
DROP IN I PLUS	AIR BATH	4260DPA
DROP IN I PLUS	COMBO BATH	4260DPWA
DROP IN I PLUS	TUB ONLY	4260DPT

SPECIFICATIONS	WHIRLPOOL AIR/COMBO	SOAKER
59 7/8" x 40 3/4" x 23"		
Water Capacity - Operating Level	37.0 gal	
- To Overflow	67.0 gal	67.0 gal
Approx. Unit Weight	100 lbs.	135 lbs.
Water Depth to Overflow	18.5	18.5

INSTALLATION NOTES: Install this fixture according to the installation manual. Confirm specifications before starting installation.

ELECTRICAL REQUIREMETS:
Whirlpool pump/motor- 120V, 20A, 60HZ,
Air Blower/Heater- 120V, 20A, 60HZ
Dedicated GFCI required

All dimensions are +/- 1/4" and subject to change without notice.

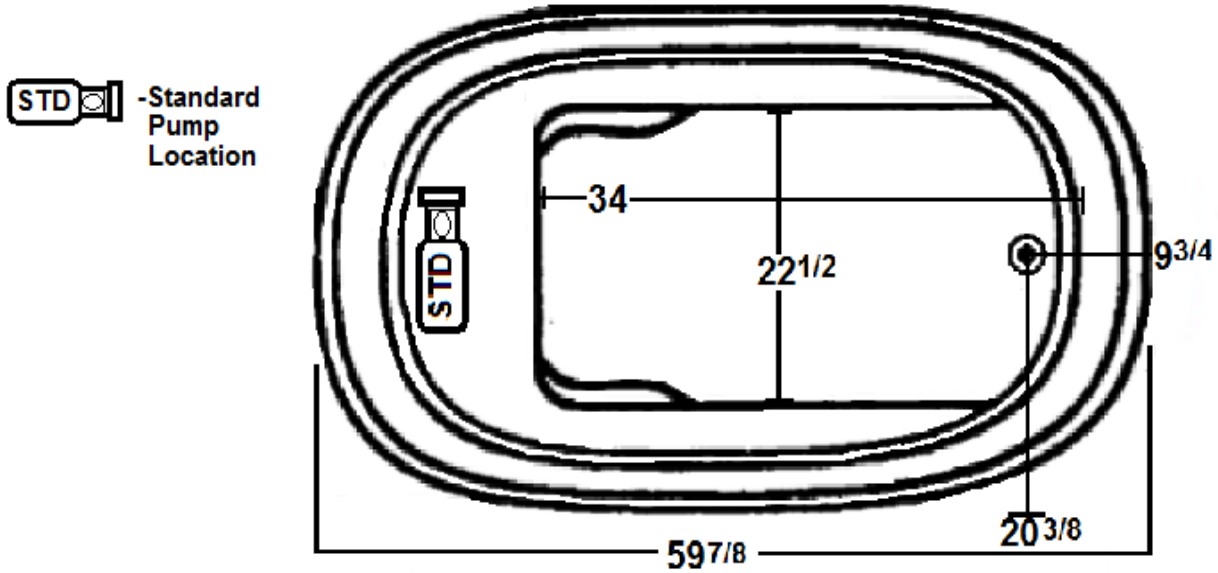

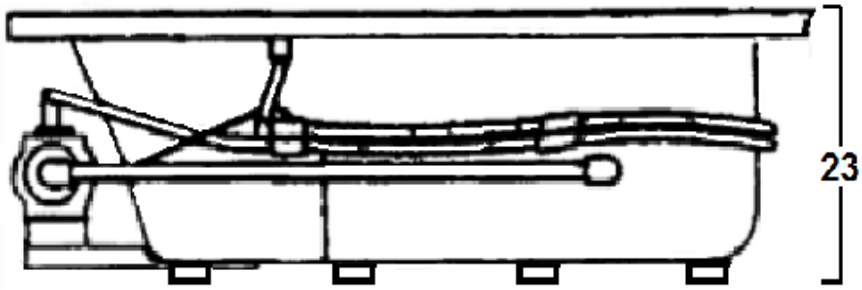

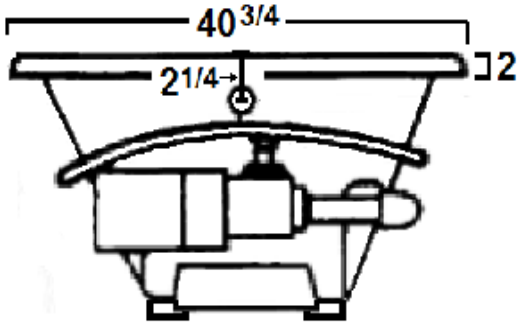

Website: www.laurelmountainwhirlpools.com
Email: sales@laurelmountainwhirlpools.com
Phone: 800-930-0050
Fax: 800-930-0051

Manufacturing Facility
1610 James P. Rodgers Drive
Valdosta, GA 31601

Sales/Customer Service
26 Nesbitt Rd. Suite 257
New Castle, PA 16105