Renaissance® Gas Range

Revised 03/21/16

www.Dacor.com

Models: RNRP36GS/LP RNRP36GS/NG RNRP36GS/LP/H RNRP36GS/NG/H

Product tolerances: ±1/16” (±0.16 cm)

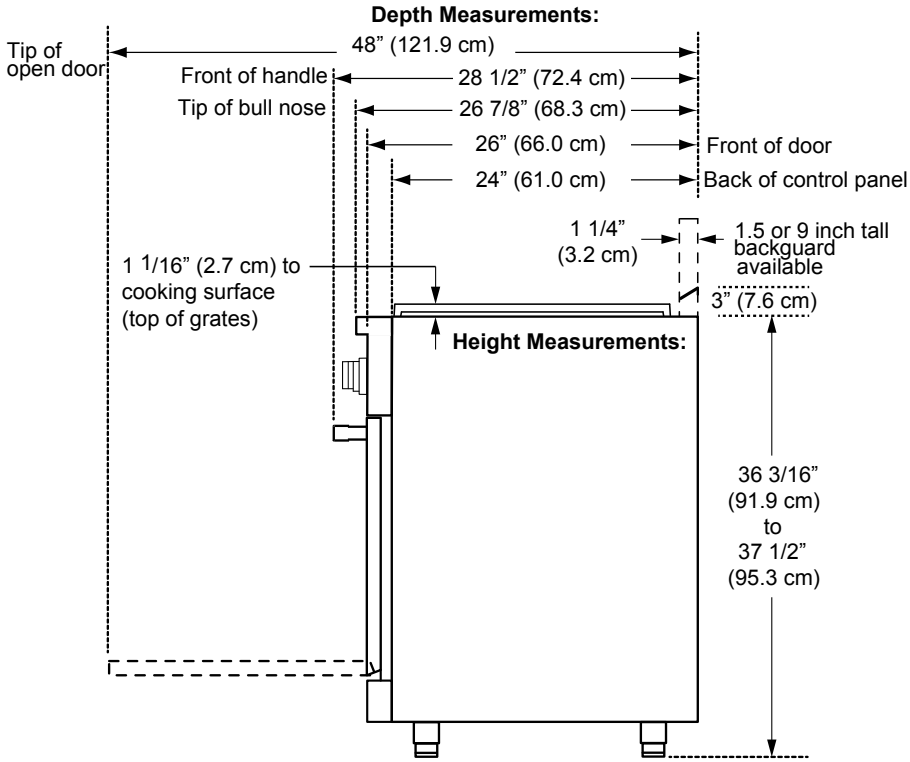

RNRP36G width:
35 7/8” (91.1 cm)

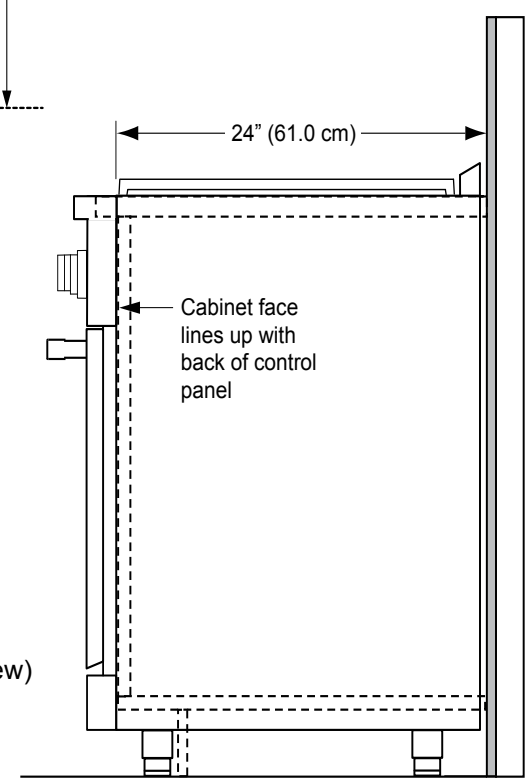

Installed Range (Side View)

Important: Dacor reserves the right to change specifications without notice. Dimensions provided are for reference only. Before installation, consult the installation instructions accompanying each product prior to selecting cabinetry, making cutouts or starting installation.