NE2321L

Left Hand Model Shown

FEATURES

- Waterproof Inward Opening Door – 17 ¾”
- 17” High (ADA’s requirement) Molded Seat
- ADA Complaint
- Limited Life Time Warranty on the door seal
- Free Standing
- 2” Drain System
- Safety Grab Bars
- High Volume Tub Filler
- Hand Held Shower
- Front Access Panel
- Available in Left or Right Hand Models
- 8” Extension Panel (optional extra)
- Easy 4-6hrs Installation
- 1 Side Panel Included (customer chooses side)

TECHNICAL INFORMATION

- **Materials**: ABS composite acrylic with fiber glass backing
- **Dimensions**: 51 x 29 ½ x 42 inches
- **Power Supply**: 110 volt
- **Non Occupied Water Capacity**: 55-65 gallons

PLUMBING REQUIRMENTS

- Unit is equipped with flexible, metal braided water supply hose with NPT ½ female threaded connectors
- Need to install hot and cold shutoffs with NPT ½ male threaded nipples (not included)
- It is advised to have tub onsite before preparing drain location.
- ***Note:*** The flexible drain hose that is included with this unit is for installation into a floor drain only. Substituting the existing drain show for a different one will not void the warranty as long as there is no damage or evidence of misuse.

ELECTRICAL INFORMATION FOR HEATED AIR PUMP

- Air jet motor with heater 110 volt
- Dedicated 12-2 wire with 110 volt, 15-20 amp GFCI breaker or GFCI outlet

GENERAL INFORMATION

- ***Note***: It is advised to have the tub onsite before preparing drain location.
  Unit must be leveled in its permanent position and all feet must be on the ground to fully support the tub.
- Contact the manufacturer for specific drain information.
  Manufacturer reserves the right to change specs or features at anytime. Please check to confirm details. 1-866-783-2661

NE2321-Left

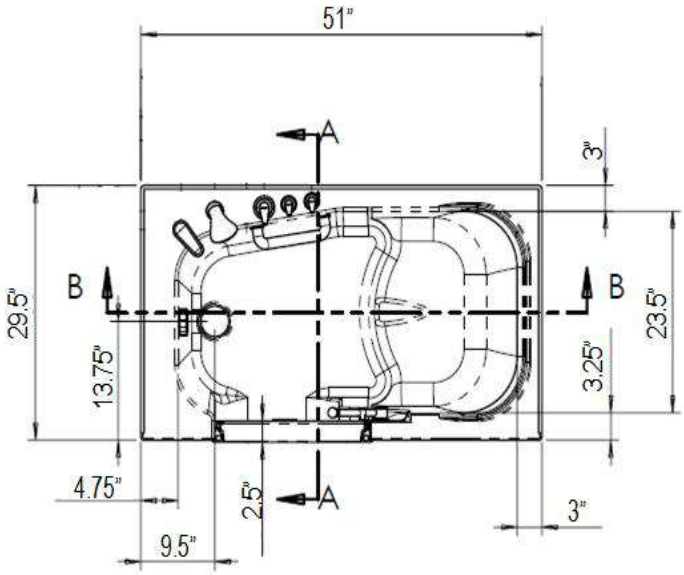

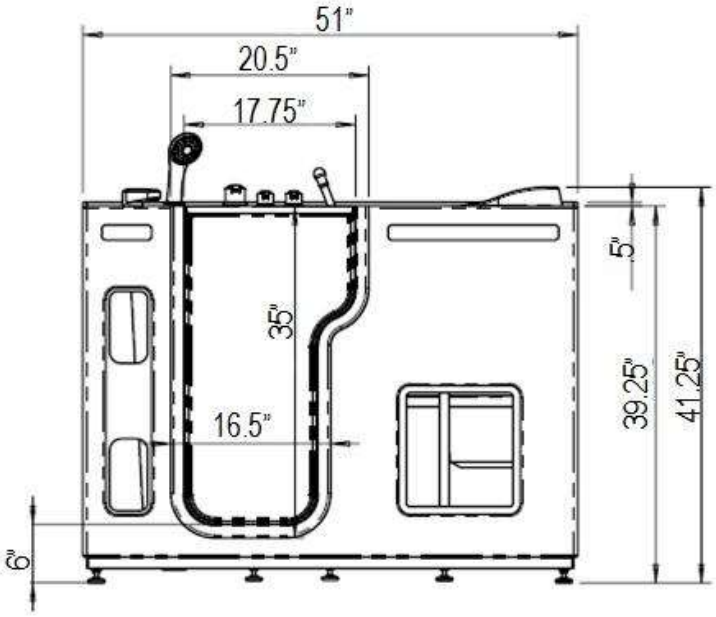

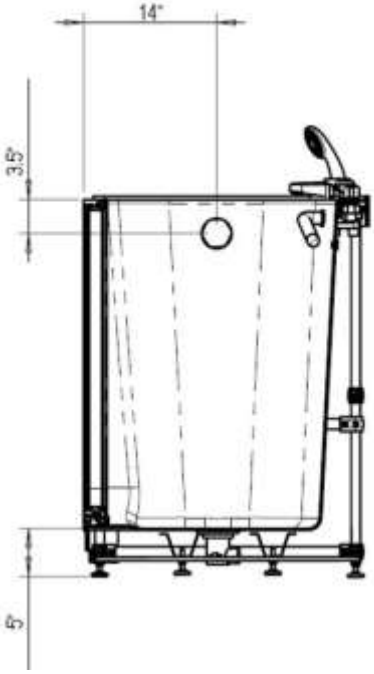
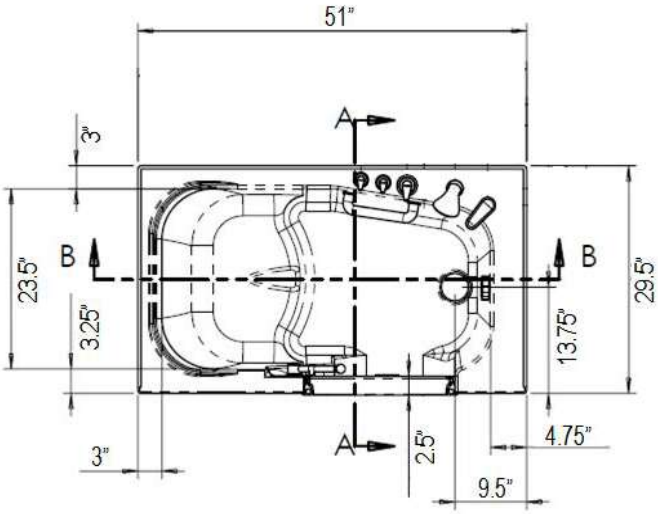
NE2321-Right