KOHLER®

Roughing-In

K-5250
SERRA™
DRINKING FOUNTAIN

Product Information

Applicable product:	
Drinking fountain	K-5250

Fixture:	
Configuration	Drinking fountain

Included components:	
Hanger accessory pack	52046
Supply fitting sub-assembly	79187
Supply stop sub-assembly	35308
Trap with strainer	35312
Bottom access plate assembly	35268
Side access plate assembly	35266

Installation Notes

Install this product according to the installation guide.
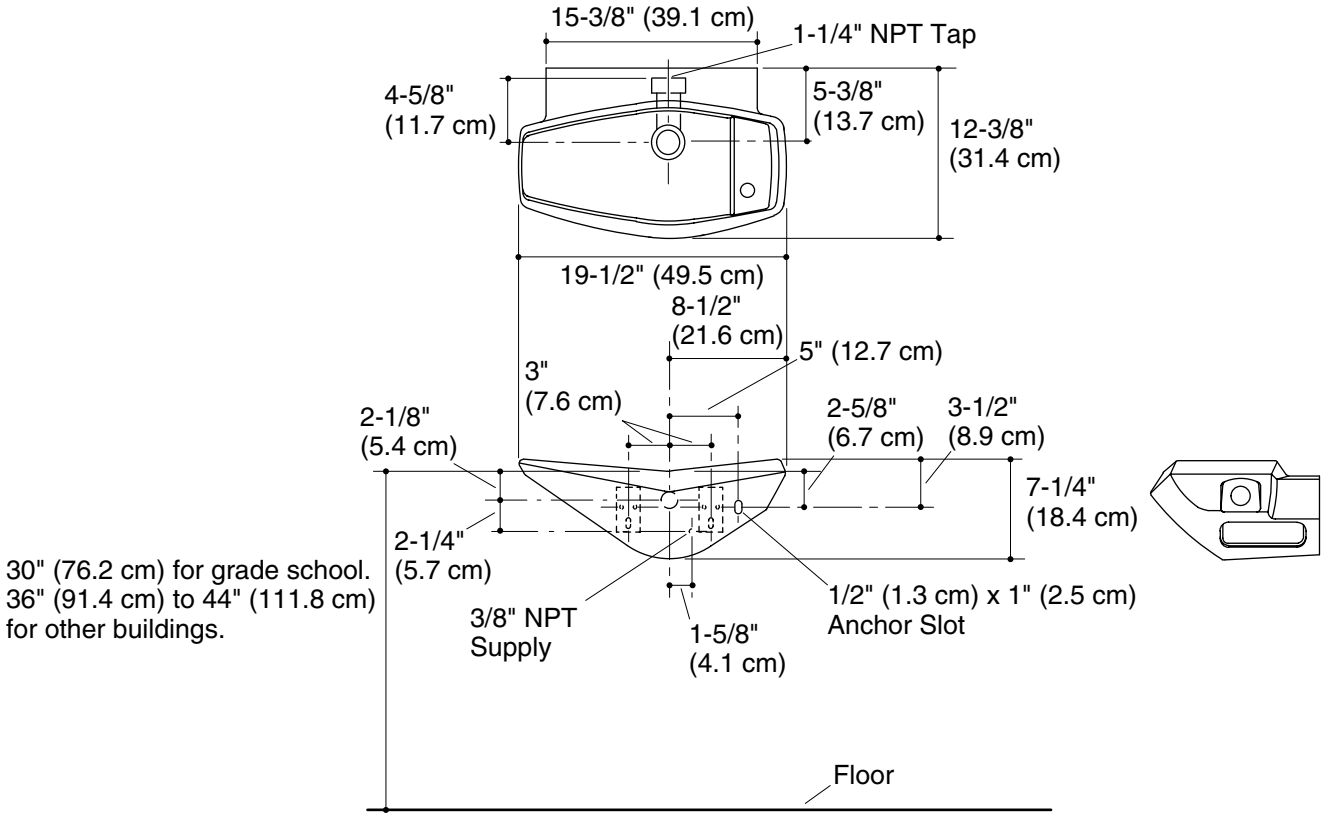
Fixture conforms to ASME Standard A112.19.2/CSA B45.1. All dimensions are nominal.