KOHLER®

Roughing-In

K-1157, K-1157-L/-R
PROFLEX® 7236
BATH WHIRLPOOL

Product Information

Applicable products:	
Bath whirlpool – drop-in	K-1157
Bath whirlpool – left drain, tile flange	K-1157-L
Bath whirlpool – right drain, tile flange	K-1157-R

Fixture*:	
Basin area:	
Bathing well	55″ (1397 mm) x 21″ (533 mm)
Top area	65″ (1651 mm) x 26″ (660 mm)
Weight	66 lbs (29.9 kg)
To overflow:	
Water depth	15″ (381 mm)
Capacity	72 gal (272.5 L)
* Approximate measurements for comparison only.	

Drop-in cut-out	70-1/2″ (1791 mm) x 34-1/2″ (876 mm)

Pump:	V	Hz	A
1-speed	120	60	7.5

Required Electrical Service

Dedicated circuit required, protected with Class A Ground-Fault Circuit-Interrupter (GFCI):	
Pump/control	120 V, 15 A, 60 Hz
Locate the outlet behind the whirlpool and within 24″ (610 mm) of the pump.	

Installation Notes

Install this product according to the installation guide.

Floor support under whirlpool must provide for a minimum of 38 lbs/square foot (188 kg/square meter) loading.

The apron must be installed before the finished floor and wall materials are installed.

Fixture conforms to ANSI Standard Z124.1.2. All dimensions are nominal.
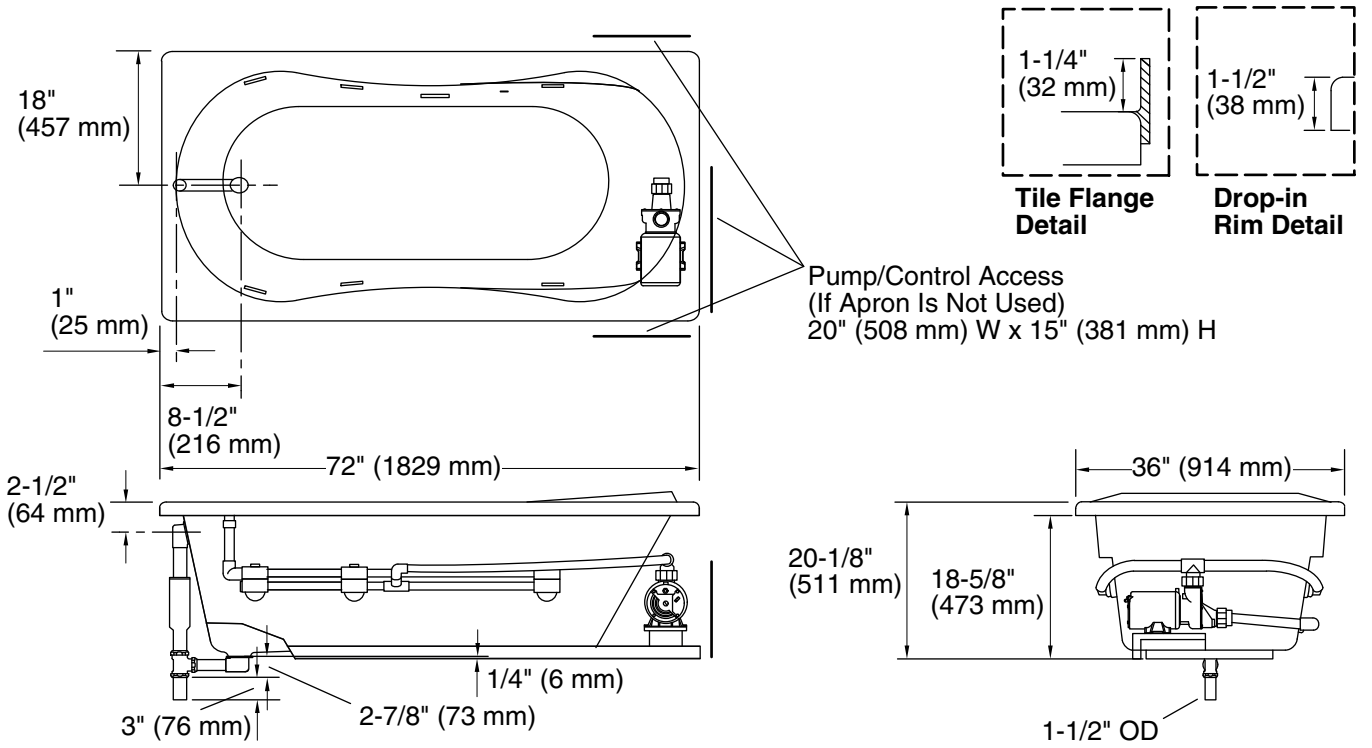
No change in measurements if connected with drain illustrated. (K-11677 or K-11677M)