KOHLER®

Roughing-In

K-316
FINIAL® FUNDAMENTALS
BIDET FAUCET

Product Information

Applicable faucet trim:	
With lever handles	K-316-4
With T-handles	K-316-6

Installation Notes
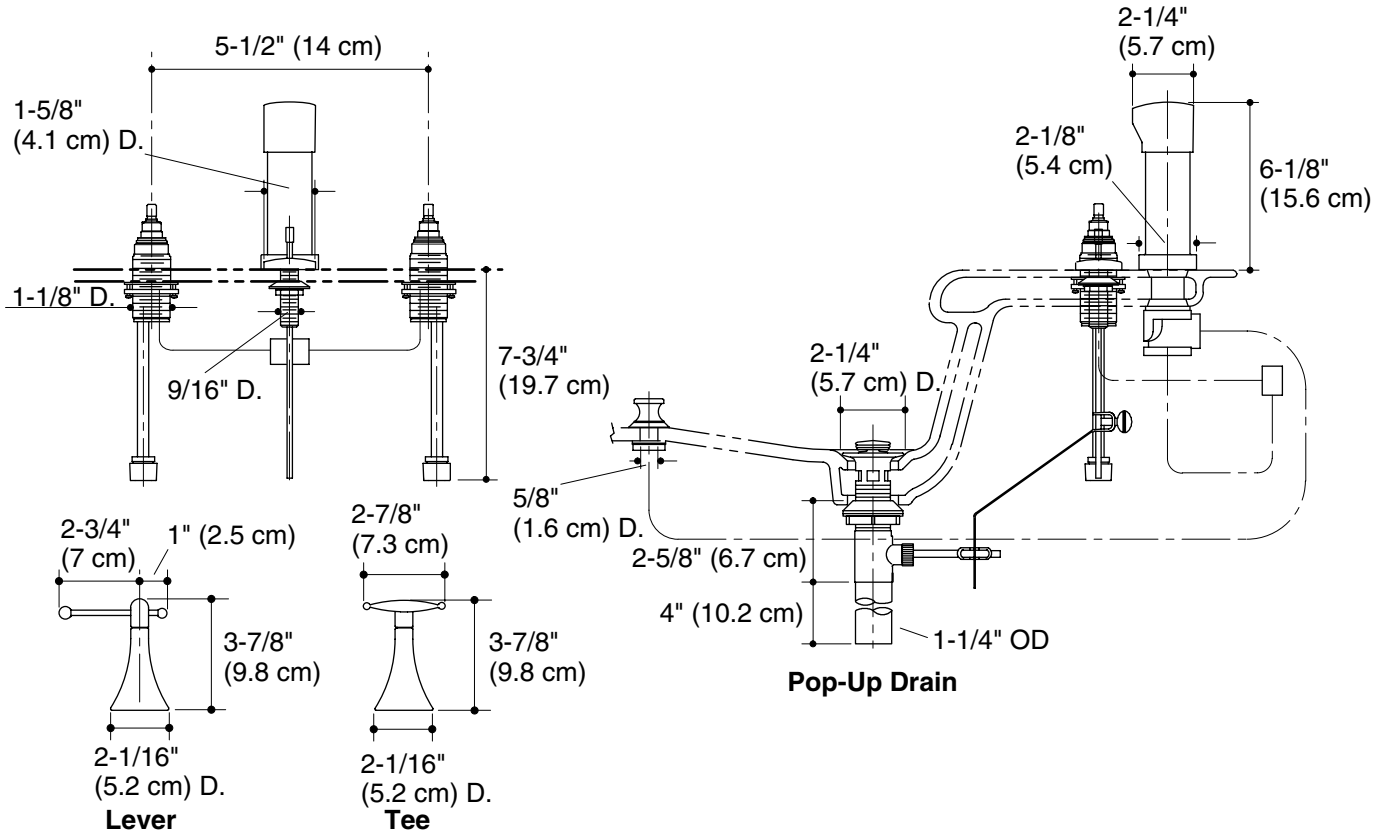
Install this product according to the installation guide.