KENDALL MEDIA FIREPLACE MANTLE

FA938600TX--ESPRESSO

FA938700TX--GLAZED PINE

FA938800TX--MAHOGANY

ASSEMBLY INSTRUCTION

For assistance with assembly contact:
Southern Enterprises Inc.
Customer Service 1-800-633-5096
service@seidal,com
www.seidal.com

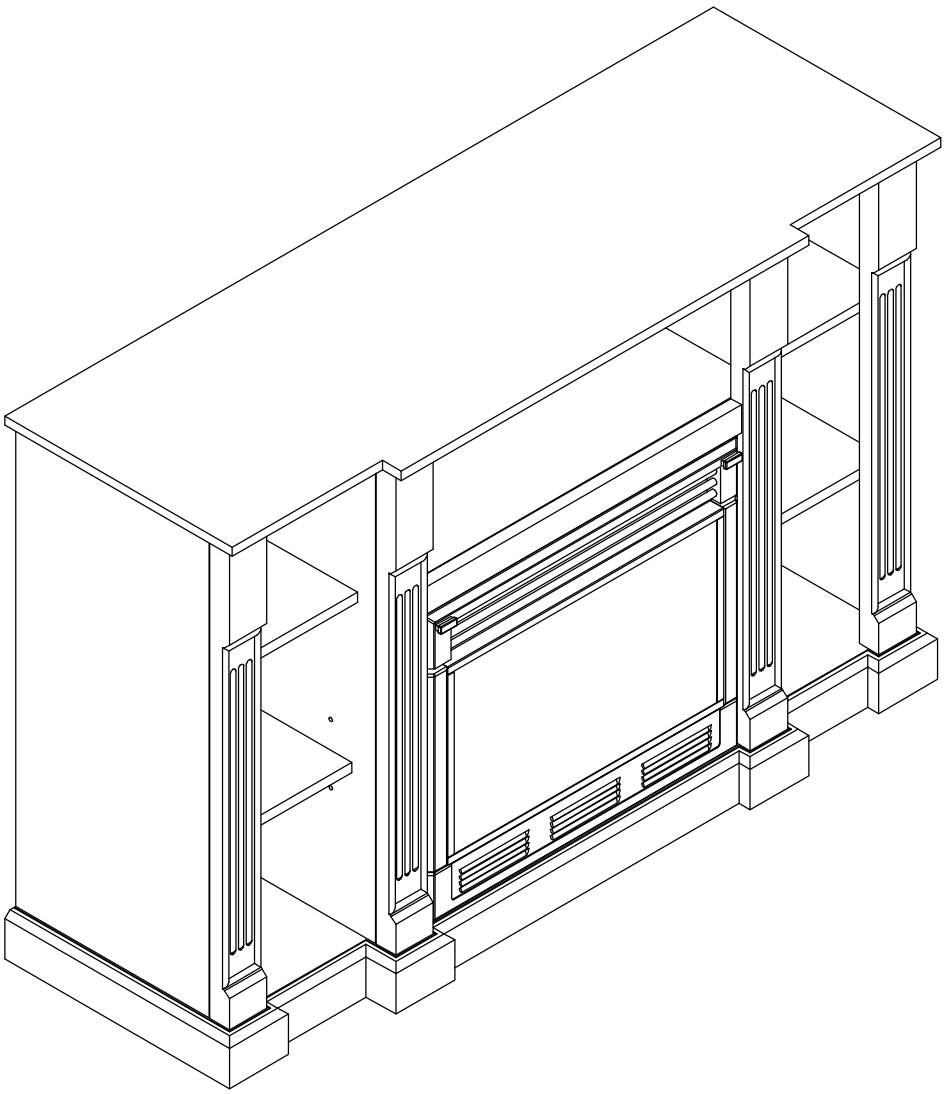

PACKAGE CONTENTS

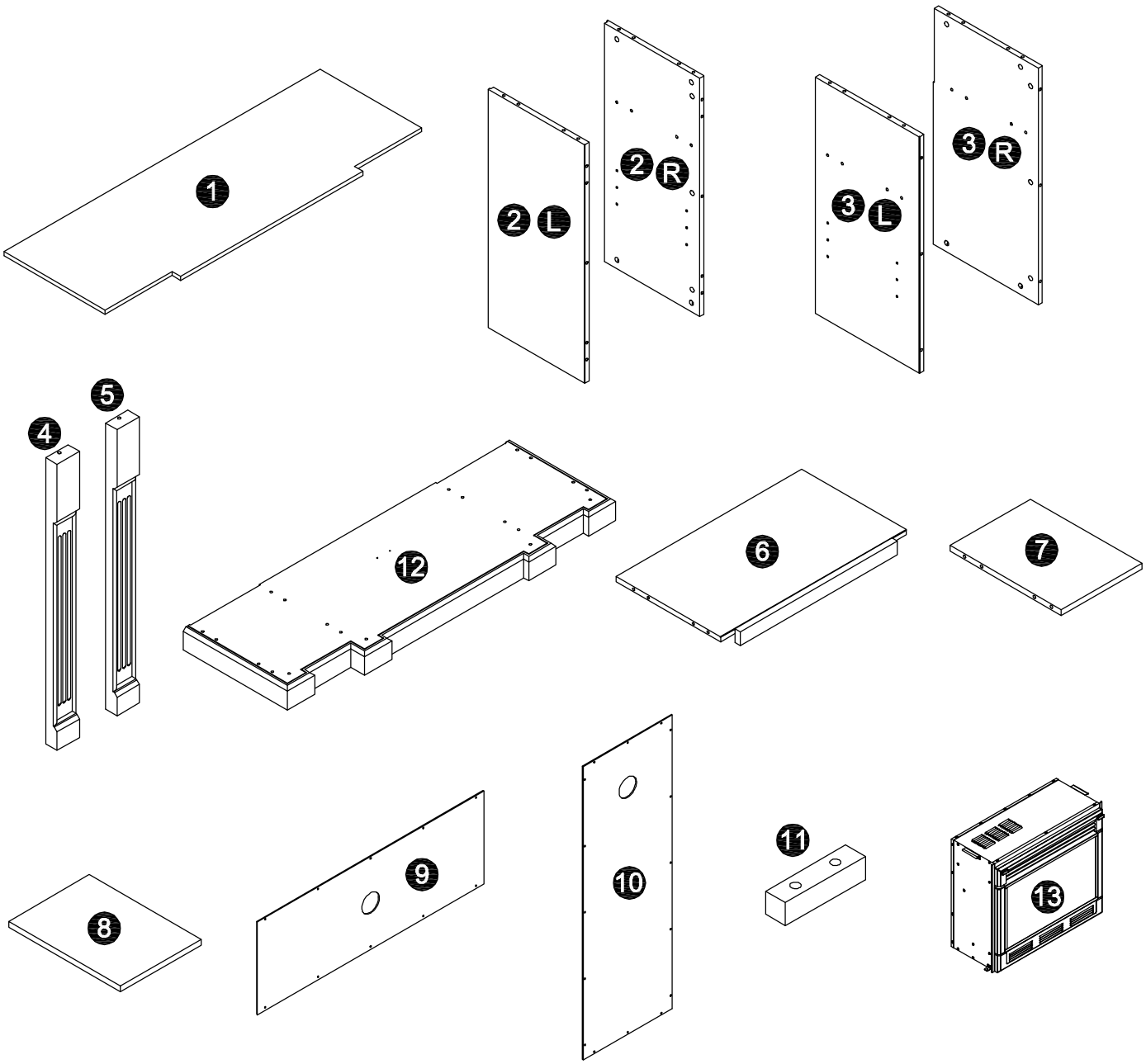

PART	DESCRIPTION	QUANTITY
1	Top Panel	1
2	Side Panel(L/R)	2
3	Middle Vertical Panel (L/R)	2
4	Left Front Panel	2
5	Right Front Panel	2
6	Middle Shelf Panel	1
7	Shelf Panel	2

PART	DESCRIPTION	QUANTITY
8	Adjustable Shelf Panel	2
9	Middle Back Panel	1
10	Side Back Panel	2
11	Wood Holder	1
12	Firebox(sold in a separate carton)	1
13	Base	1

HARDWARE CONTENTS (shown actual size)

A

Cam Bolt
Qty. 48

B

Wood Dowel
Qty. 36

C

Cam Lock
Qty. 48

D

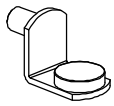

Shelf Bracket
Qty. 8

E

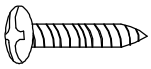

Round Head Screw
Qty. 42

F

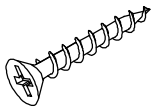

Flat Head Screw
Qty. 2

SAFETY INFORMATION

please read and understand this entire manual before attempting to assemble,operate or install the product. If you have any questions regarding the product, please call customer service at 800-633-5096 or in Dallas 972-869-0111/ 9am - 4pm Mon-Fri.

WARNING

- Product is heavy and should be assembled near its desired location.
- It is recommended that two people move the finished Product to prevent injury.

PREPARATION

Before beginning assembly of product, make sure all parts are present. Compare parts with package contents list and hardware contents adove. If any part is missing or damaged, do not attempt to assemble the product. Contact customer service for replacement parts.

Estimated Assembly Time: 60 minutes

Tools Required for Assembly:Phillips Screwdriver (not included)

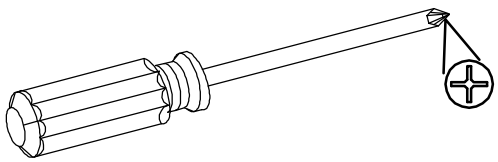

ASSEMBLY INSTRUCTIONS

1.Insert cam locks(C) into predrilled holes on 1pc shelf panel(7).Screw cam bolt(A) into predrilled holes on side panel(2R) & middle vertical panel(3R). Attach side panel(2R)& middle vertical panel(3R) to 1pc shelf panel(7) by slipping wood dowel(B) & cam bolt(A) into corresponding predrilled holes until side panel(2R)& middle vertical panel(3R) & 1pc shelf panel(7)meet.Secure by rotating cam lock (C) counterclockwise with Phillips screwdriver.
Repeat with another shelf panel(7) & side panel(2L) & middle vertical panel(3L).

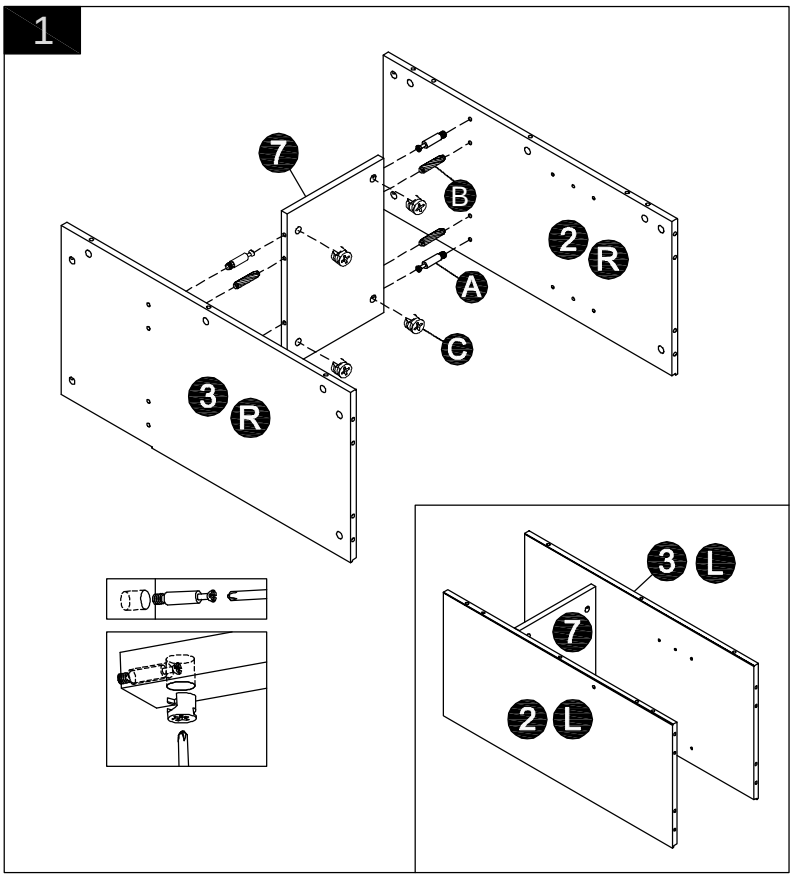

Hardware Used

A	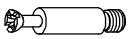	Cam Bolt	X 8
B		Wood Dowel	X 8
C		Cam Lock	X 8

2.Insert cam locks(C) into predrilled holes on Middle Shelf Panel(6).Screw cam bolt(A) into predrilled holes on assembled unit in the step 1. Attach Middle Shelf Panel(6) to assembled unit in the step 1 by slipping wood dowel(B) & cam bolt(A) into corresponding predrilled holes until Middle Shelf Panel(6)& assembled unit in the step 1 meet.Secure by rotating cam lock (C) counterclockwise with Phillips screwdriver.

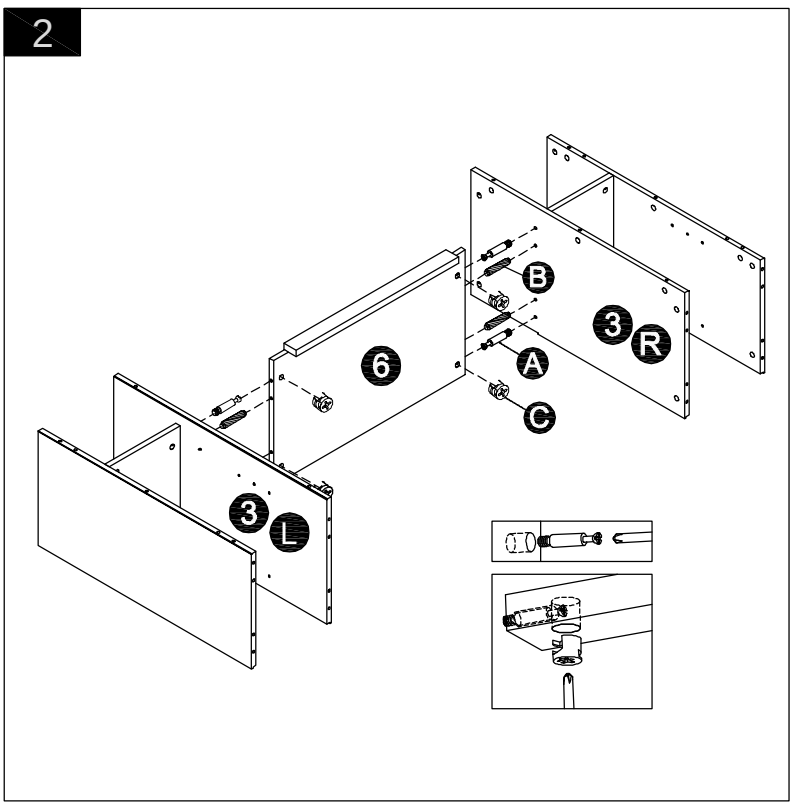

Hardware Used

A	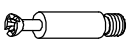	Cam Bolt	X 4
B		Wood Dowel	X 4
C		Cam Lock	X 4

ASSEMBLY INSTRUCTIONS

3.Insert cam locks(C) into predrilled holes on side panel(2R) & middle vertical panel(3R).Screw cam bolt(A) into predrilled holes on right front panels (5). Attach right front panels (5) to panel(2R) & middle vertical panel(3R) by slipping wood dowel(B) & cam bolt(A) into corresponding predrilled holes until right front panels (5) & panel(2R) , middle vertical panel(3R) meet.Secure by rotating cam lock (C) counterclockwise with Phillips screwdriver.

Repeat with left front panels(4) & side panel(2L) & middle vertical panel(3L).

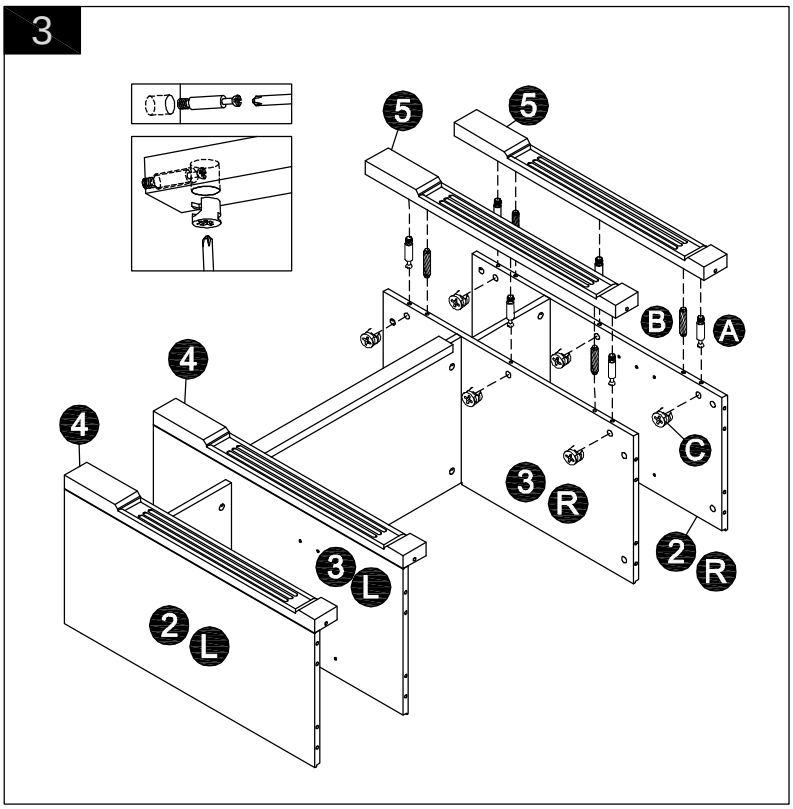

Hardware Used

A	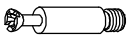	Cam Bolt	X 12
B		Wood Dowel	X 8
C		Cam Lock	X 12

4.Insert cam locks(C) into predrilled holes on assembled unit in the step 3.Screw cam bolt(A) into predrilled holes on base (12). Attach base (12) to assembled unit in the step 3 by slipping wood dowel(B) & cam bolt(A) into corresponding predrilled holes until assembled unit in the step 3 & base (12) meet.Secure by rotating cam lock (C) counterclockwise with Phillips screwdriver.

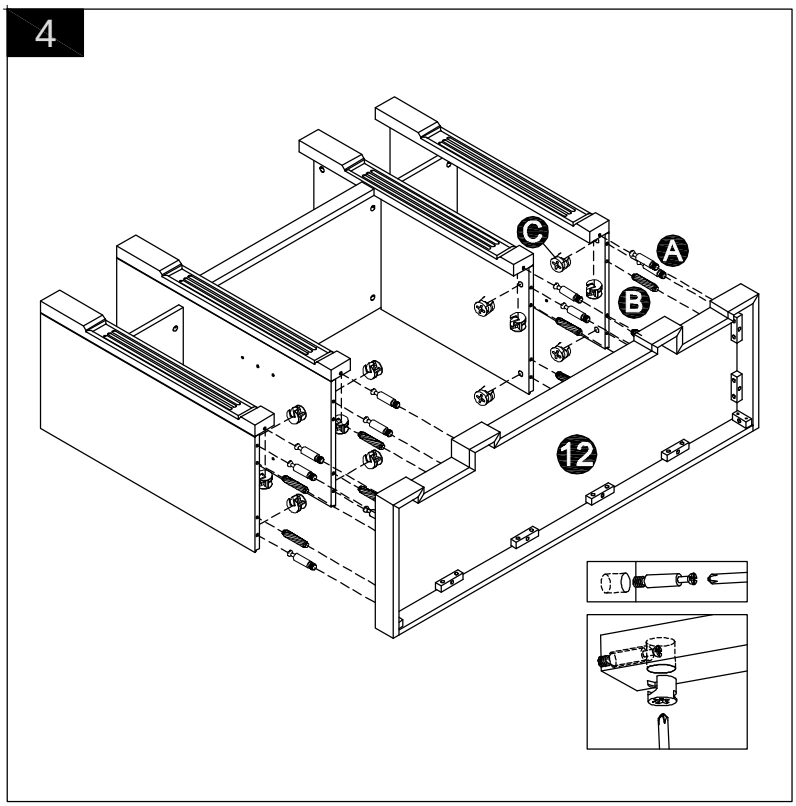

Hardware Used

A	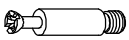	Cam Bolt	X 12
B		Wood Dowel	X 8
C		Cam Lock	X 12

ASSEMBLY INSTRUCTIONS

5.Insert cam locks(C) into predrilled holes on assembled unit in the step 4.Screw cam bolt(A) into predrilled holes on top panel (1). Attach top panel (1) to assembled unit in the step 4 by slipping wood dowel(B) & cam bolt(A) into corresponding predrilled holes until top panel (1) & assembled unit in the step 4 meet.Secure by rotating cam lock (C) counterclockwise with Phillips screwdriver.

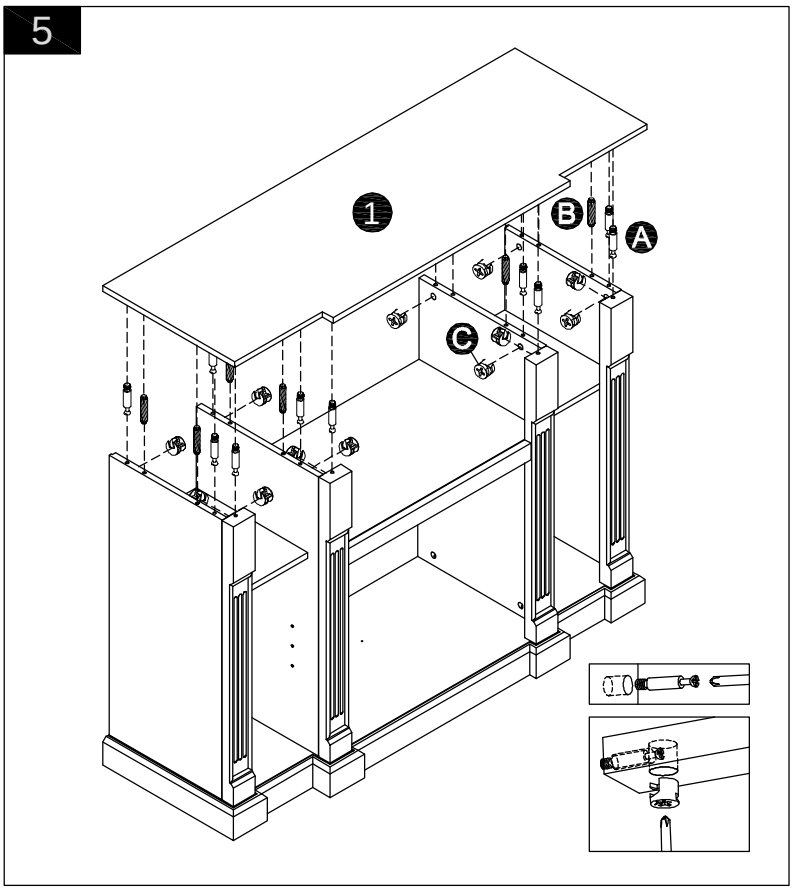

Hardware Used

A	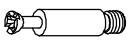	Cam Bolt	X 12
B		Wood Dowel	X 8
C		Cam Lock	X 12

6.Attached middle back panel (9) & side back panels(10) by inserting round head screw (E) into predrilled holes and tightening with Phillips screwdriver(not included).

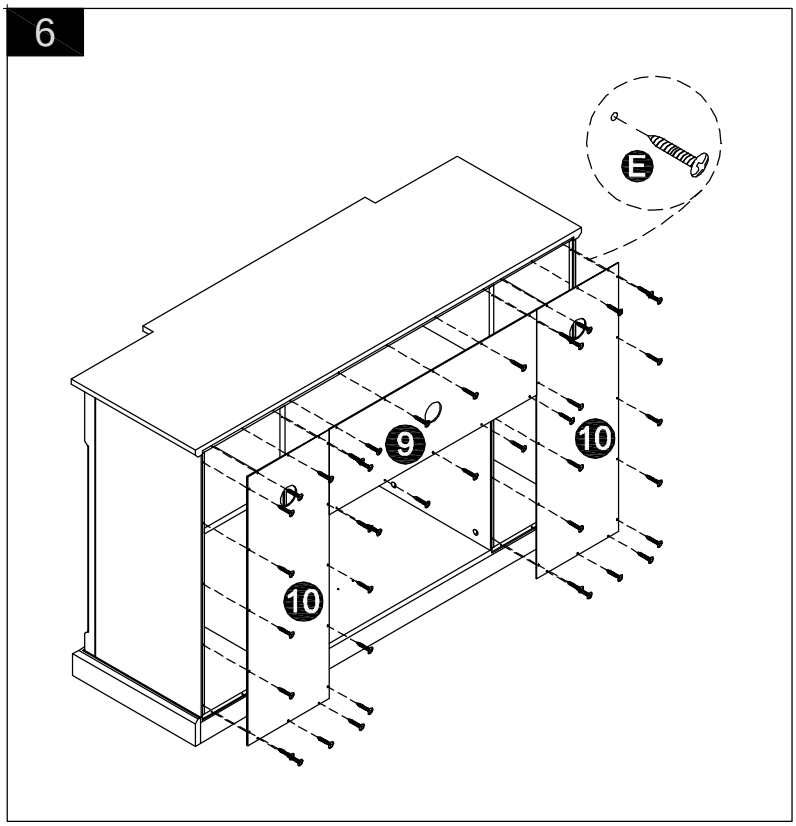

Hardware Used

E		Round Head Screw	X 42

ASSEMBLY INSTRUCTIONS

7.Insert firebox(13) to the related place of assembled unit.

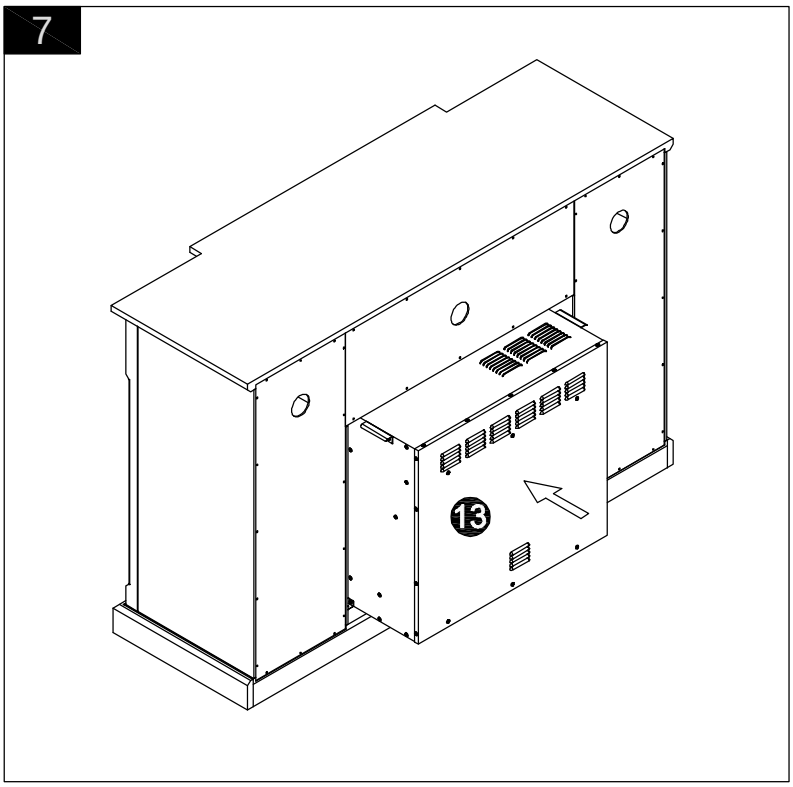

8.Attached wood holder (11) by inserting flat head screw(F) into corresponding predrilled holes and tightening with Phillips screwdriver(not included).

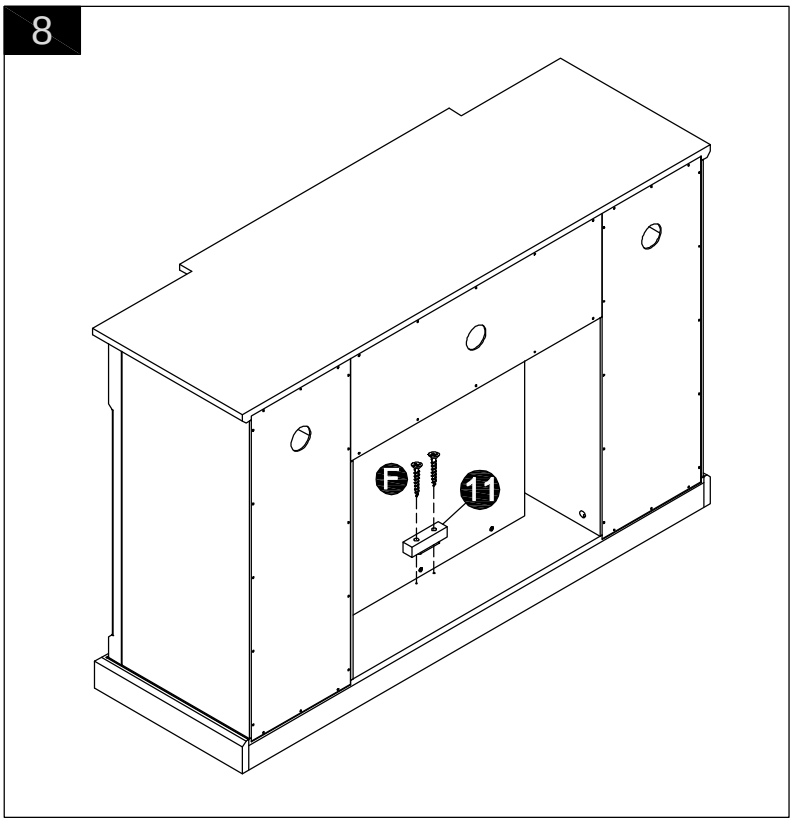

Hardware Used

F Flat Head Screw X 2

ASSEMBLY INSTRUCTIONS

9.Insert shelf bracket (D) into corresponding holes,then place adjustable shelf panel (8) on top of shelf bracket (D) .

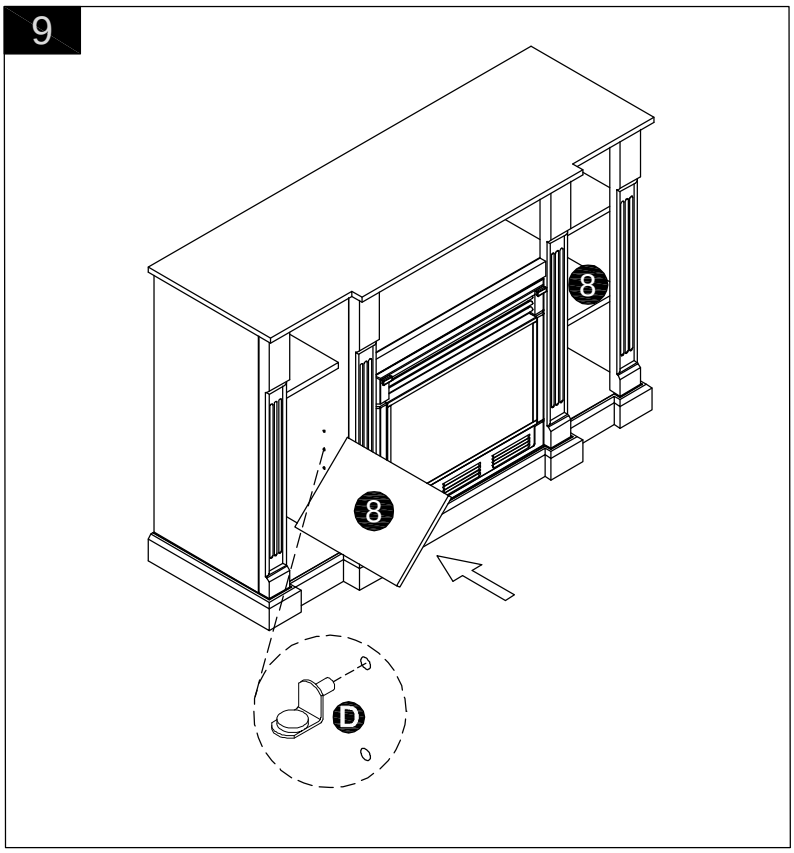

Hardware Used

D		Shelf Bracket	X 8

10. Now your new fireplace is ready to use.

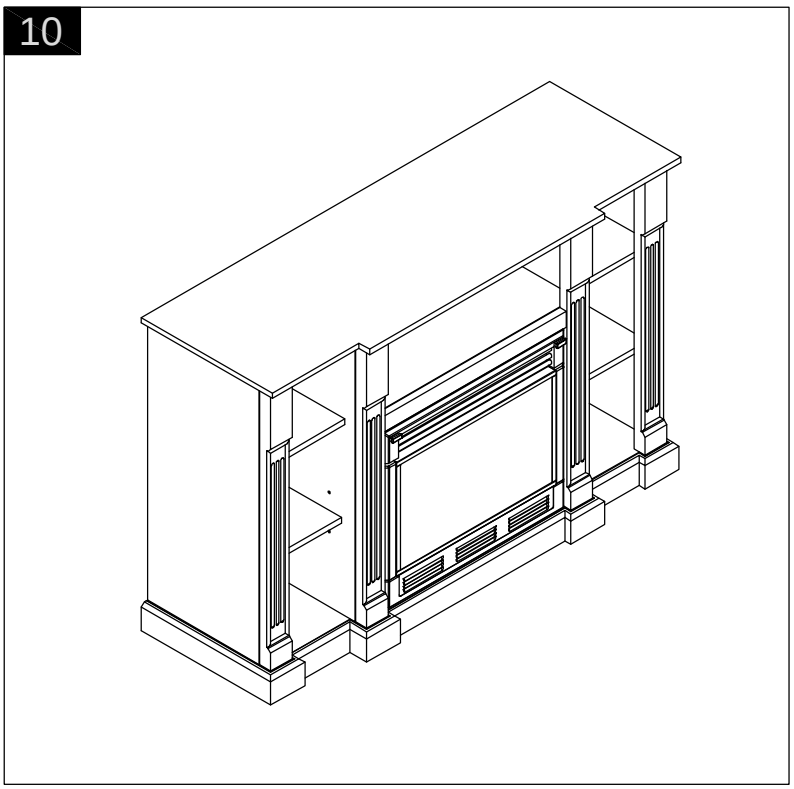

Parts Replacement Form

Customer Information

Name _____

Address _____

City/State/Zip Code _____

Phone Number _____

Please indicate where you purchased this item: Store/Website/Catalog

_____

Please indicate color/size/style number:

_____

Style No	Parts Letter	Parts Description	Quantity Needed

Please immediately examine this product carefully. Any request for missing parts or damage replacement must be received within 90 days of your receipt of the product . Replacement, if available, will be honored within this time frame. Parts will not be available for items arriving fully assembled. We do not recommend modifying product(s) and we are not responsible for any damages due to product modification(s). If damages or missing parts are not reported within 90 days of your receipt, we are under no obligation to provide parts or replacement merchandise.

Please contact Southern Enterprises at 800-633-5096 or in Dallas 972-869-0111/ 9am - 4pm Mon-Fri Central time if you have product issues or email us at service@seidal.com. Please ask for customer service representative for issues involving damages or replacement parts. Please ask for technical assistance representative for any issues with product and assembly/construction.

Please contact the retailer that you purchased from for returns.

Customer Service 1-800-633-5096
service@seidal.com
Southern Enterprises, Inc.
600 Freeport Parkway, Suite 200
Coppell, Texas 75019

⚠ CAUTION

The top shelf is intended for a flat screen television with a maximum overall width of 38″ and supports up to 65lb.

Each center shelf should not be loaded with more than 20 lb.

DO NOT EXCEED RECOMMENDED LOAD. Use with products heavier than the maximum sizes and weights indicated may result in instability causing possible injury.

This unit contains a permanent warning sticker located on under side of top shelf or inside drawer.

Do not allow children under 16 years old to move the cart.

Model: FA938600TX/FA938700TX/FA938800TX
KENDALL MEDIA FIREPLACE MANTLE
Southern Enterprises, Inc
600 Freeport Parkway, Suite 200
Coppell, Texas, 75019
Manufacture Date: