DN098700TX
Logan Dining Table
Assembly Instructions

Southern
ENTERPRISES

For assistance with assembly, contact:
Southern Enterprises, Inc.
customer service 1-800-633-5096
service@seidal.com
www.seidal.com

PO#:

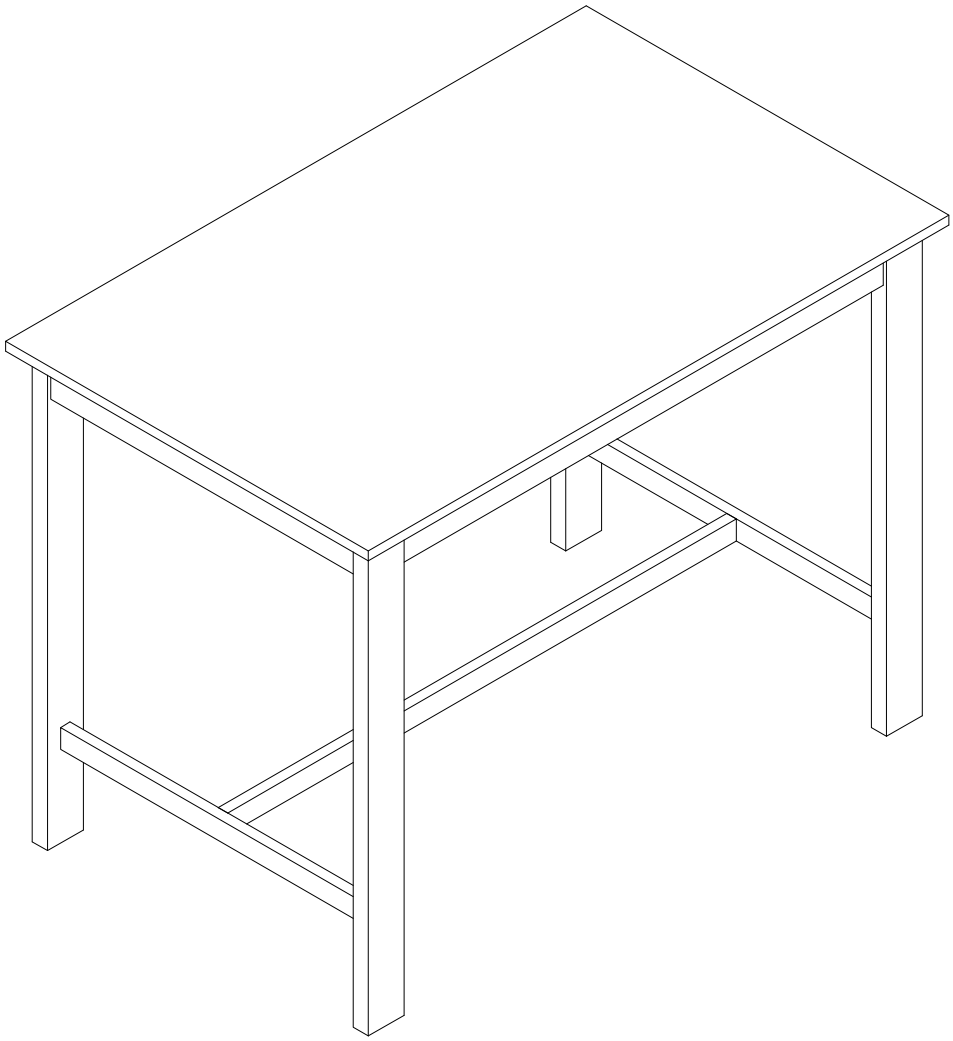

Logan Dining Table

Parts List

Please check packaging for all parts and hardware before discarding. Unpack and lay parts on clean, padded surface like carpet or blanket. Check that you have all parts indicated. Call customer service if hardware is missing. Before beginning assembly, carefully study the diagrams below and sort your hardware according to the pictures. Using the incorrect hardware will cause damage.

A Quantity of 1

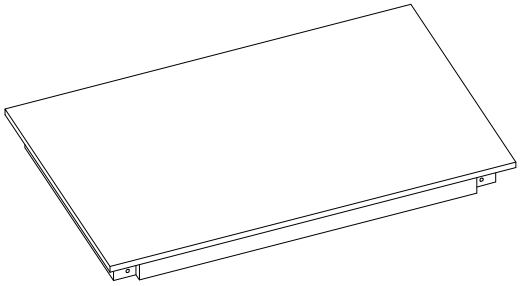

top frame

B Quantity of 2

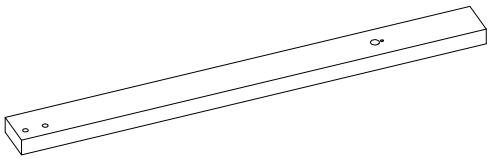

left leg

C Quantity of 2

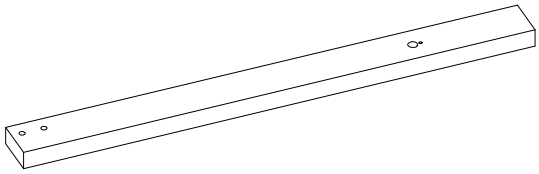

right leg

D Quantity of 2

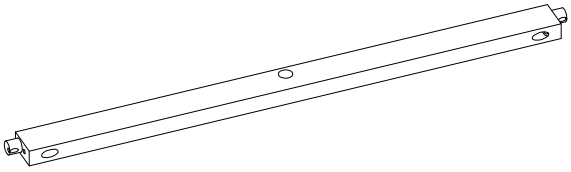

short side stretcher

E Quantity of 1

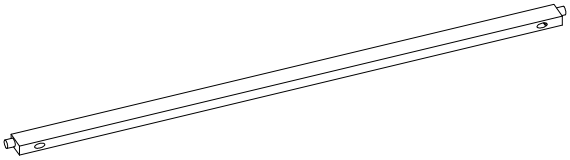

long middle stretcher

1 Quantity of 1 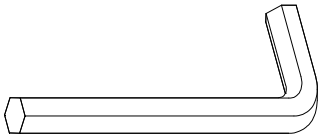 allen wrench	**2** Quantity of 8 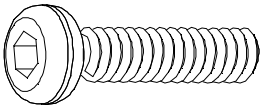 bolt: Dia 5/16” x 1-1/2”L
3 Quantity of 8 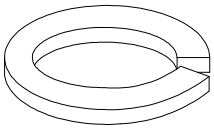 spring washer	**4** Quantity of 8 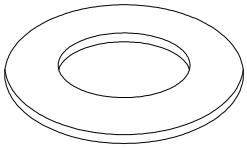 flat washer
5 Quantity of 4 long screw: 3/16” x 1-1/2”L	6 Quantity of 2 screw: 3/16” x 1-1/4”L
Care and Cleaning Instructions: Before using, wipe with a clean, dry cloth. Avoid rubbing or scratching the surface with rough or abrasive objects.	For replacement parts or questions, please call customer service at 1-800-633-5096
Assembly Tool Required No.2 Phillips Screwdriver (Not Included)	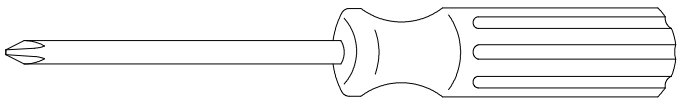

Logan Dining Table

Assembly Instructions

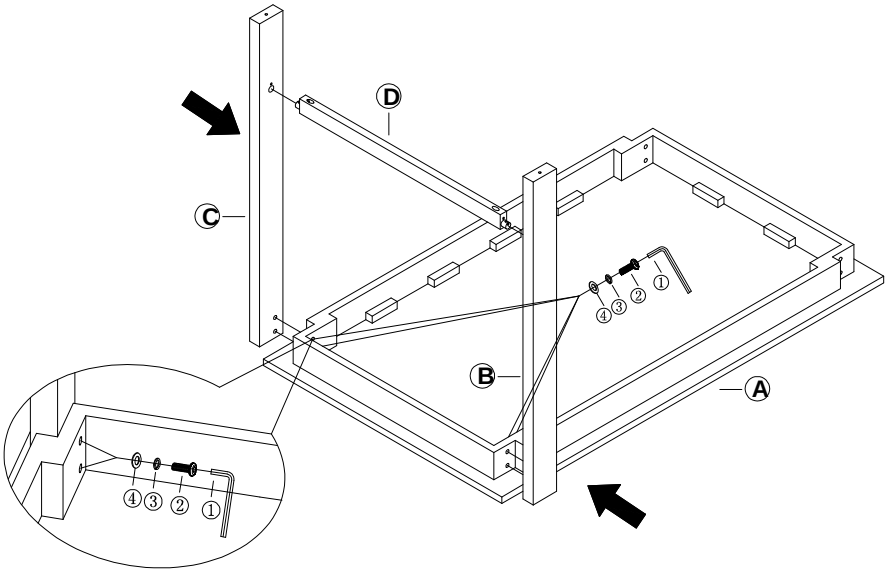

Figure 1

Turn top frame (A) upside-down on a soft working surface and insert the bolts (2) into the spring washers (3) and flat washers (4).

Attach the right leg (C) to top frame (A) with bolts (2) and tighten all bolts (2) using allen wrench (1). Then, insert one end of short side stretcher (D) into the hole on right leg (C).

Attach left leg (B) to top frame using bolts (2) and insert the other end of stretcher (D) into left leg (B). Fasten bolts (2) with allen wrench (1).

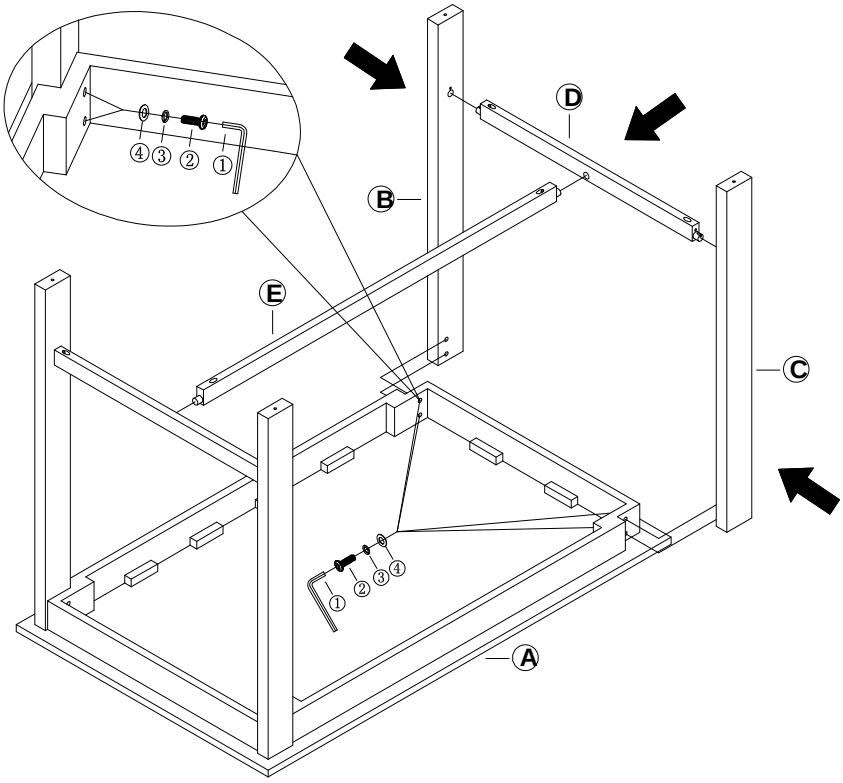

Figure 2

Repeat the steps figure 1 to assemble right leg (C) and insert one end of side stretcher (D) into right leg (C). Fasten bolts (2) with allen wrench (1).

Insert both ends of long middle stretcher (E) into holes of both side stretchers (D) as shown.

Attach left leg (B) to top frame and insert the another end of stretcher (D) into left leg (B). Fasten bolts (2) with allen wrench (1).

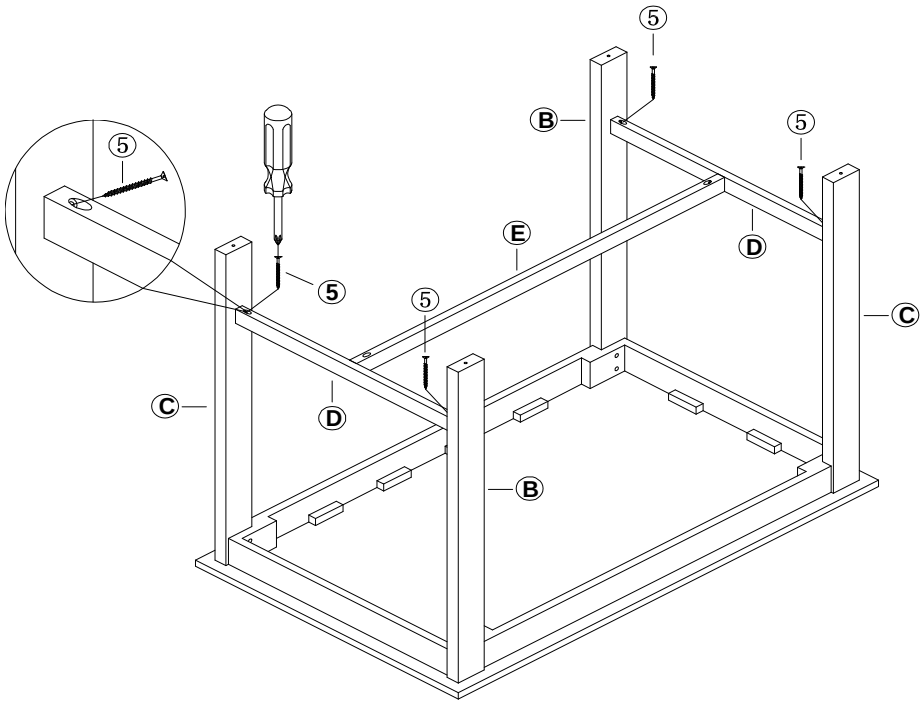

Figure 3

Insert long screws (5) into pre-drilled holes on stretchers (D) as shown, and tighten using screwdriver.

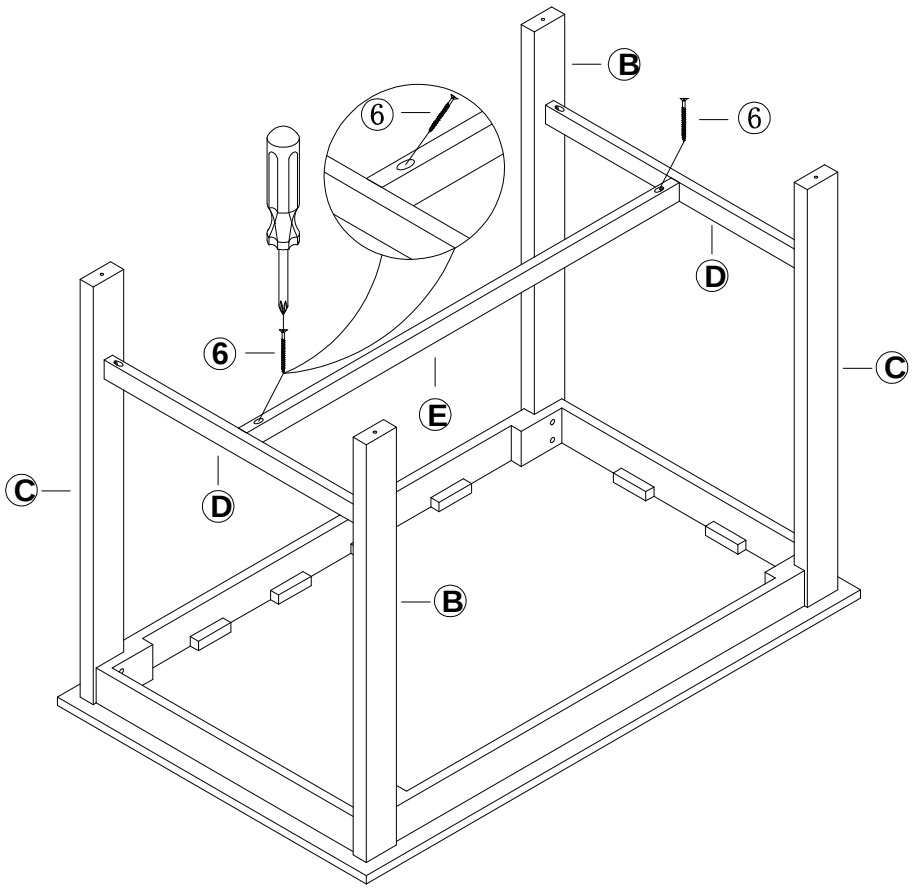

Figure 4

Insert screws (6) into pre-drilled holes on stretcher (E) as shown, and tighten using screwdriver.

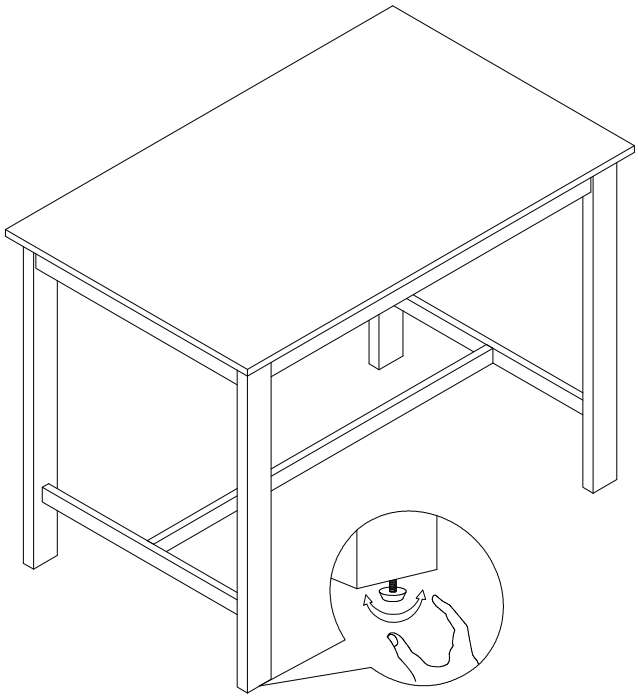

Figure 5

Turn the table over. If the table is not level, please adjust the levelers on the end of the legs by hand as shown.

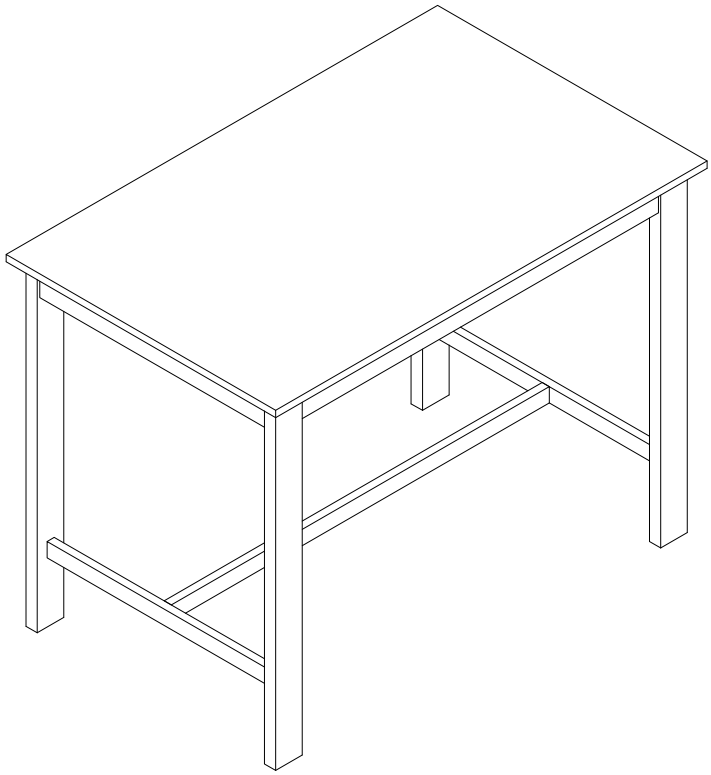

Figure 6

Now your Logan Dining Table is ready to use.

Parts Replacement Form

Customer Information

Name _____

Address _____

City/State/Zip Code _____

Phone Number _____

Please indicate where you purchased this item: Store/Website/Catalog

_____

Please indicate color/size/style number:

_____

Style No	Parts Letter	Parts Description	Quantity Needed

Please immediately examine this product carefully. Any request for missing parts or damage replacement must be received within 90 days of your receipt of the product. Replacement, if available, will be honored within this time frame. Parts will not be available for items arriving fully assembled. We do not recommend modifying product(s) and we are not responsible for any damages due to product modification(s). If damages or missing parts are not reported within 90 days of your receipt, we are under no obligation to provide parts or replacement merchandise. Please contact Southern Enterprises at 800-633-5096 or in Dallas 972-869-0111/ 9am – 4pm Mon-Fri Central time if you have product issues or email us at service@seidal.com. Please ask for customer service representative for issues involving damages or replacement parts. Please ask for technical assistance representative for any issues with product and assembly/construction.

Please contact the retailer that you purchased from for returns.

Southern
ENTERPRISES

Customer Service 1-800-633-5096
service@seidal.com
Southern Enterprises, Inc.
600 Freeport Parkway, Suite 200
Coppell, Texas 75019