KOHLER®

Roughing-In

K-18691-1
ESCALE®
PEDESTAL LAVATORY

Product Information

Applicable product:	
Pedestal lavatory	K-186911

Fixture*:	
Basin area	22-1/16″ (56 cm) x 16-3/8″ (41.6 cm)
Water depth	4-1/4″ (10.8 cm)
Drain hole	1-11/16″ (4.3 cm) D.
Faucet hole	1-3/8″ (3.5 cm) D.
*Approximate measurements for comparison only.	

Included components:	
Integrated top and basin	K-19034
Pedestal	K-19024
Mounting kit assembly	5527-NF
Overflow cover	C7709000-CP

Recommended accessories:	
Symbol™ single-control lavatory faucet with pop-up drain	K-19480-4

Installation Notes

Install this product according to the installation guide.
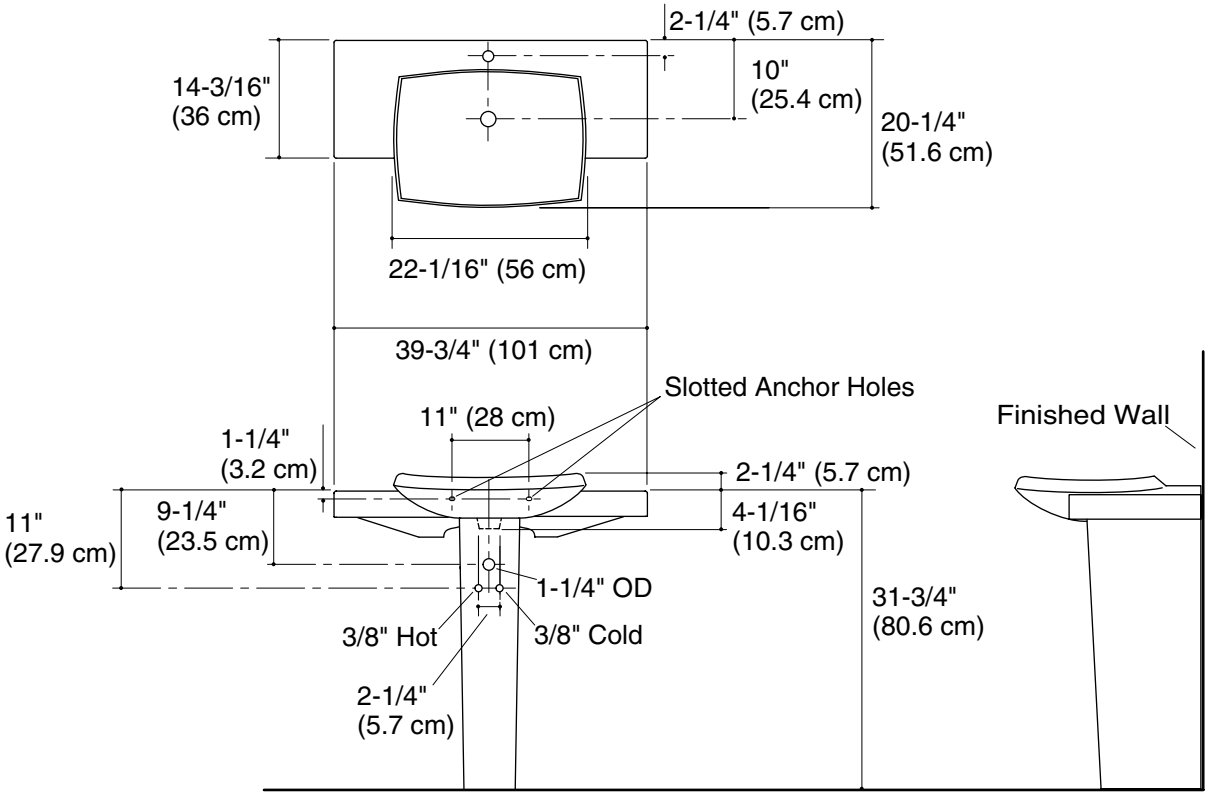
Fixture conforms to ASME Standard A112.19.2/CSA B45.1. All dimensions are nominal.