ERWD, EWD, IWD, MRWD, MWDV, MWDH, OWD and PWD

dacor The Life of the Kitchen®

24”, 27”, 30”, 36”, Wide Warming Drawers

PLANNING GUIDE

Product tolerances: ±1/16” (±1.6 mm) unless otherwise stated

Electrical Circuit Required	Total Connected Load
120 Vac, 60 Hz, 15 Amps. grounded, dedicated circuit	4.0 Amps. @ 120 Vac, 60 Hz

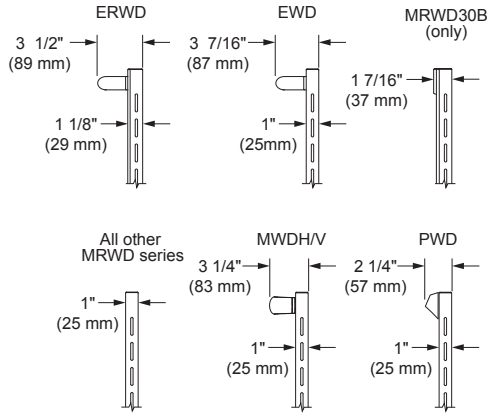

HANDLE DIMENSIONS - SIDE VIEW

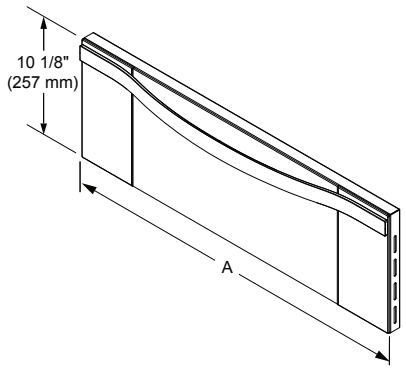

DRAWER FACE DIMENSIONS
(MWD SERIES SHOWN)

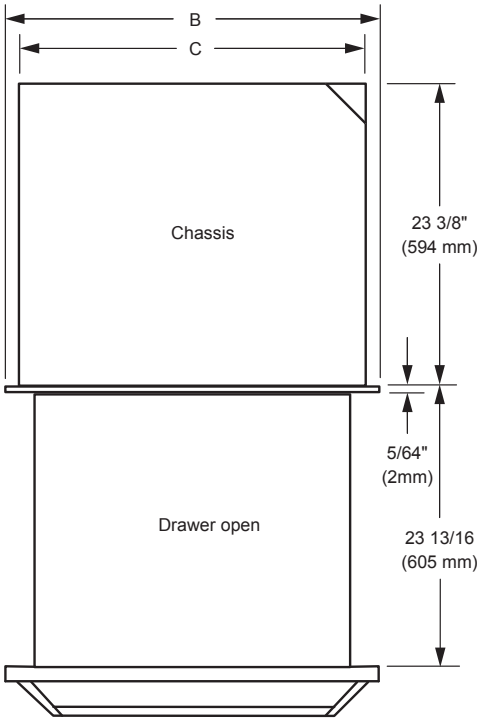

OVERALL DIMENSIONS - TOP VIEW (EWD SERIES SHOWN)

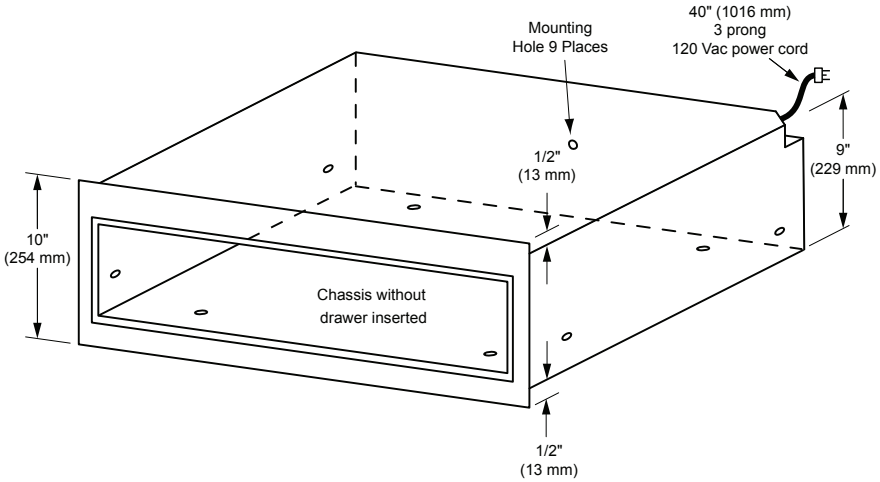

CHASSIS DIMENSIONS

Model	(A) Drawer Face Width	(B) Chassis Face Width	(C) Chassis Width
ERWD30	30” (762 mm)	29 5/8” (752 mm)	28 1/4” (718 mm)
EWD24	24” (610 mm)	23 5/8” (600 mm)	22 1/4” (565 mm)
EWD27	27” (686 mm)	26 5/8” (676 mm)	25 1/4” (641 mm)
EWD30	30” (762 mm)	29 5/8” (752 mm)	28 1/4” (718 mm)
EWD36	36” (914 mm)	35 5/8” (905 mm)	34 1/4” (870 mm)
MRWD27	27” (686 mm)	26 5/8” (676 mm)	25 1/4” (641 mm)
MRWD30	30” (762 mm)	29 5/8” (752 mm)	28 1/4” (718 mm)
MWDH27	27” (686 mm)	26 5/8” (676 mm)	25 1/4” (641 mm)
MWDH30	30” (762 mm)	29 5/8” (752 mm)	28 1/4” (718 mm)
MWDV27	27” (686 mm)	26 5/8” (676 mm)	25 1/4” (641 mm)
MWDV30	30” (762 mm)	29 5/8” (752 mm)	28 1/4” (718 mm)
PWD27	27” (686 mm)	26 5/8” (676 mm)	25 1/4” (641 mm)
PWD30	30” (762 mm)	29 5/8” (752 mm)	28 1/4” (718 mm)

WARMING DRAWER OVERALL DIMENSIONS

For PWD series models:

The Dacor color palette has been developed and implemented throughout our product offerings in order to provide designers and customers with a coordinating suite of products. All of our Dacor Preference products compliment the design aesthetic of today's kitchens as well as one another. Due to the inherent nature of color rendition, the variation of materials used to assemble these handcrafted products and manufacturing production tolerances, variation based upon ambient and natural lighting conditions as well as surrounding surface color and texture may cause noticeable variation in saturation. These Dacor products are intended to coordinate with one another and noticeable differentiation may be apparent if units are installed directly adjacent to one another.

dacor The Life of the Kitchen®

24”, 27”, 30”, 36”, Wide Warming Drawers

PLANNING GUIDE

Product tolerances: ±1/16” (±1.6 mm) unless otherwise stated

Electrical Circuit Required	Total Connected Load
120 Vac, 60 Hz, 15 Amps. grounded, dedicated circuit	4.0 Amps. @ 120 Vac, 60 Hz

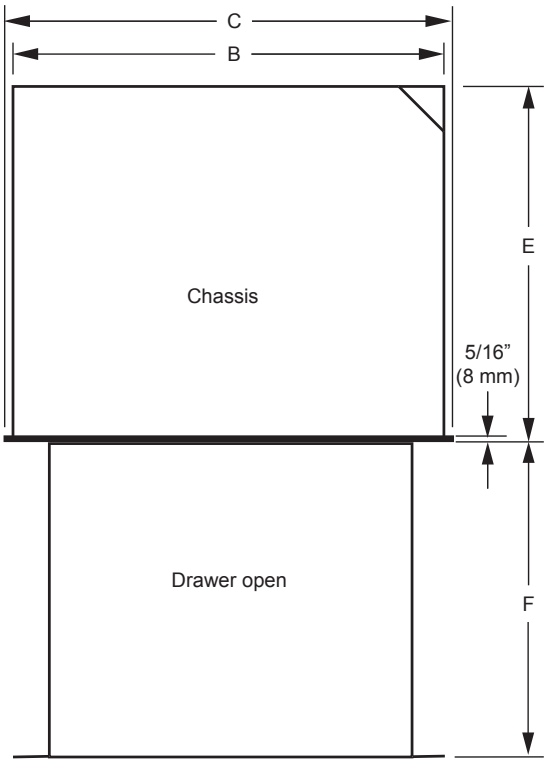

OVERALL DIMENSIONS - IWD/OWD SERIES TOP VIEW

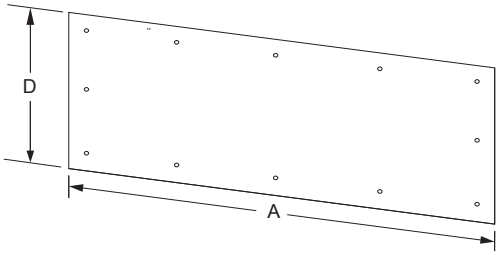

DRAWER FACE DIMENSIONS
(IWD/OWD SERIES SHOWN)

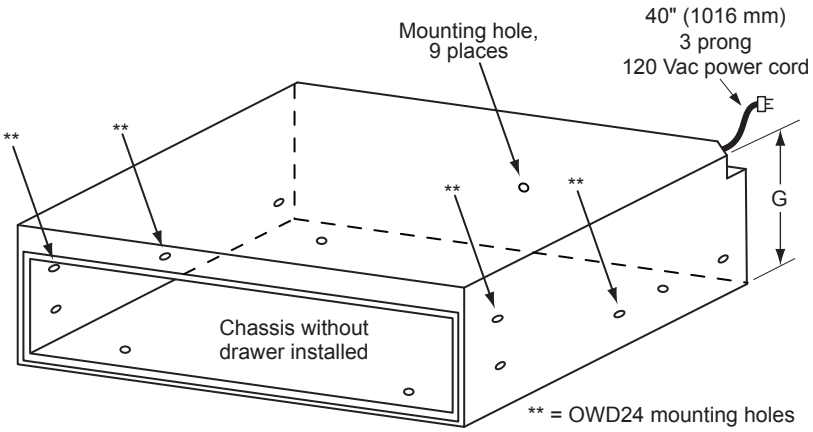

CHASSIS DIMENSIONS
(IWD/OWD SHOWN)

Model	(A) Dimension Drawer Face Width	(B) Dimension Chassis Width	(C) Dimension Chassis Face Width	(D) Dimension Drawer Face Height	(E) Dimension Chassis Depth	(F) Dimension Drawer Depth	(G) Dimension Chassis Height
IWD24	22 5/16” (567 mm)	22 1/4” (565 mm)	22 3/8” (568 mm)	8 15/16” (227 mm)	23 3/8” (594 mm)	23 13/16” (605 mm)	9 1/16” (230 mm)
IWD27	25 5/16” (643 mm)	25 1/4” (641 mm)	25 3/8” (645 mm)				
IWD30	28 5/16” (719 mm)	28 1/4” (718 mm)	28 3/8” (721 mm)				
OWD24	22 1/2” (571 mm)	22 1/2” (571 mm)	22 1/2” (571 mm)	11 7/8” (302 mm)	20” (508 mm)	18” (457 mm)	11 7/8” (302 mm)

dacor The Life of the Kitchen®

24”, 27”, 30”, 36” Wide Warming Drawers

PLANNING GUIDE

Cabinet/countertop tolerances: +1/16” (+1.6 mm) -0 unless otherwise stated

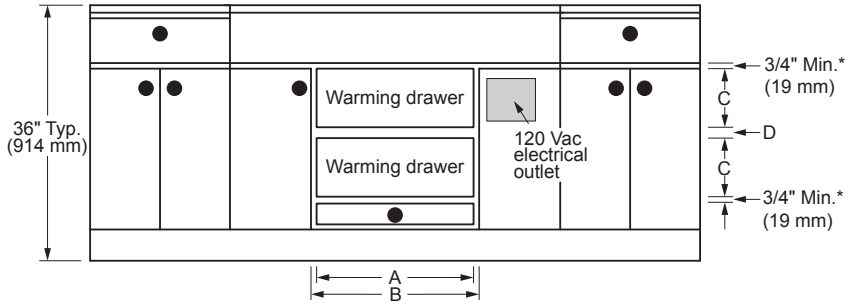

⚠ WARNING

- Observe all governing codes and ordinances during planning and installation. Contact your local building department for further information.
- This appliance must be installed in accordance with the accompanying installation instructions.

Mounting platform must be 3/4" (19 mm) thick and support 100 lbs.

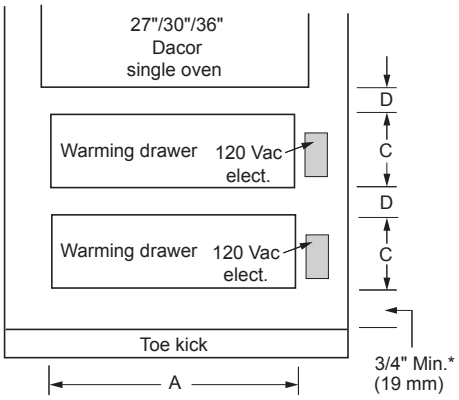

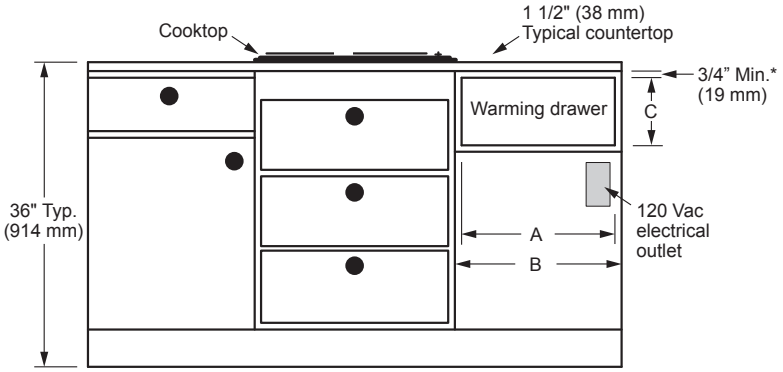

Model	(A) Cutout Width	(B) Min. Width to Adjacent Doors/ Drawers	(C) Cutout Height	(D) Min. Vertical Gap Between Cutouts	Min. Cutout Depth
ERWD30	28 1/2” (724 mm)	30 1/4” (768 mm)*	9 1/8” (232 mm)	1 1/4” (32 mm)*	
EWD24	22 1/2” (572 mm)	24 1/4” (616 mm)*	9 1/8” (232 mm)	1 1/4” (32 mm)*	24” (610 mm)
EWD27	25 1/2” (648 mm)	27 1/4” (692 mm)*	9 1/8” (232 mm)	1 1/4” (32 mm)*	
EWD30	28 1/2” (724 mm)	30 1/4” (768 mm)*	9 1/8” (232 mm)	1 1/4” (32 mm)*	
EWD36****	34 1/2” (876 mm)	36 1/4” (921 mm)*	9 1/8” (232 mm)	NA	
IWD24****	22 1/2” (572 mm)	**	9 1/8” (232 mm)	NA	
IWD27****	25 1/2” (648 mm)	**	9 1/8” (232 mm)	NA	
IWD30****	28 1/2” (724 mm)	**	9 1/8” (232 mm)	NA	
MRWD27	25 1/2” (648 mm)	27 1/4” (692 mm)*	9 1/8” (232 mm)	1 1/4” (32 mm)*	
MRWD30	28 1/2” (724 mm)	30 1/4” (768 mm)*	9 1/8” (232 mm)	1 1/4” (32 mm)*	
MWDH27	25 1/2” (648 mm)	27 1/4” (692 mm)*	9 1/8” (232 mm)	1 1/4” (32 mm)*	
MWDH30	28 1/2” (724 mm)	30 1/4” (768 mm)*	9 1/8” (232 mm)	1 1/4” (32 mm)*	
MWDV27	25 1/2” (648 mm)	27 1/4” (692 mm)*	9 1/8” (232 mm)	1 1/4” (32 mm)*	
MWDV30	28 1/2” (724 mm)	30 1/4” (768 mm)*	9 1/8” (232 mm)	1 1/4” (32 mm)*	
OWD24*****	22 5/8” (575 mm)	24 1/4” (616 mm)***	11 15/16” (303 mm)	NA	20 1/8” (511 mm)
PWD27	25 1/2” (648 mm)	27 1/4” (692 mm)*	9 1/8” (232 mm)	1 1/4” (32 mm)*	24” (610 mm)
PWD30	28 1/2” (724 mm)	30 1/4” (768 mm)*	9 1/8” (232 mm)	1 1/4” (32 mm)*	

* Bare minimum spacing to allow for ventilation and avoid scraping on EWD, MW and PWD series models.

** On IWD series models or OWD24 without the optional front panel kit: The chassis and the drawer faceplate are smaller than the cutout. The custom front panel mounts to the drawer faceplate. The height and width of the custom front panel must exceed the appropriate cutout dimensions (A and C above) to cover the hole. Allow 1/4" minimum additional space on the top, bottom and sides from the custom front panel edge to prevent scraping against adjacent doors, drawers and the countertop.

*** OWD24 with optional factory front panel kit only. Bare minimum spacing shown to avoid scraping. Gap above and below cutout is 3/4” minimum. See ** above for OWD24 with custom front panel.

**** This model cannot be installed above or below another warming drawer (any type).

***** Model OWD24 cannot be installed above, below or adjacent to a wall oven or warming drawer (any type).