Summit®

GAS GRILL

Natural Gas Grill Owner's Guide

ESNA **Guía del Propietario de la Barbacoa de Gas Natural - Pg. 27**

FC **Mode d'emploi du Grill à gaz naturel - Pg. 53**

620

#56216

YOU MUST READ THIS OWNER'S GUIDE BEFORE OPERATING YOUR GAS GRILL.

⚠ DANGER

If you smell gas:

1. **Shut off gas to the appliance.**
2. **Extinguish any open flames.**
3. **Open lid.**
4. **If odor continues, keep away from the appliance and immediately call your gas supplier or your fire department.**

Leaking gas may cause a fire or explosion which can cause serious bodily injury, death, or damage to property.

⚠ WARNING:

1. **Do not store or use gasoline or other flammable liquids or vapors in the vicinity of this or any other appliance.**
2. **An LP cylinder not connected for use shall not be stored in the vicinity of this or any other appliance.**

⚠ WARNING: Follow all leak-check procedures carefully in this manual prior to barbecue operation. Do this even if the barbecue was dealer-assembled.

NOTICE TO INSTALLER: These instructions must be left with the owner and the owner should keep them for future use.

THIS GAS APPLIANCE IS DESIGNED FOR OUTDOOR USE ONLY.

⚠ WARNING: Do not ignite this appliance without first reading the BURNER IGNITION sections of this manual.

56216 02/28/11 NG
US - ENGLISH

WARNINGS

⚠ DANGER

Failure to follow the Dangers, Warnings and Cautions contained in this Owner's Manual may result in serious bodily injury or death, or in a fire or an explosion causing damage to property.

⚠ WARNINGS

- ⚠ **Do not store a spare or disconnected liquid propane cylinder under or near this barbecue.**
- ⚠ **Improper assembly may be dangerous. Please follow the assembly instructions carefully.**
- ⚠ **After a period of storage, and/or nonuse, the Weber® gas barbecue should be checked for gas leaks and burner obstructions before use. See instructions in this manual for correct procedures.**
- ⚠ **Do not operate the Weber® gas barbecue if there is a gas leak present.**
- ⚠ **Do not use a flame to check for gas leaks.**
- ⚠ **Combustible materials should never be within 24 inches (61 cm) of the back or sides of your Weber® gas barbecue.**
- ⚠ **Do not put a barbecue cover or anything flammable on, or in the storage area under the barbecue.**
- ⚠ **Your Weber® gas barbecue should never be used by children. Accessible parts of the barbecue may be very hot. Keep young children away while it is in use.**
- ⚠ **You should exercise reasonable care when operating your Weber® gas barbecue. It will be hot during cooking or cleaning and should never be left unattended, or moved while in operation.**
- ⚠ **Should the burners go out while in operation, turn all gas valves off. Open the lid and wait five minutes before attempting to relight, using the igniting instructions.**
- ⚠ **Do not use charcoal or lava rock in your Weber® gas barbecue.**
- ⚠ **Never lean over open grill or place hands or fingers on the front edge of the cookbox.**
- ⚠ **Should a grease fire occur, turn off all burners and leave lid closed until fire is out.**
- ⚠ **Do not enlarge valve orifices or burner ports when cleaning the valves or burners.**
- ⚠ **The Weber® gas barbecue should be thoroughly cleaned on a regular basis.**
- ⚠ **Liquid propane gas is not natural gas. The conversion or attempted use of natural gas in a liquid propane unit or liquid propane gas in a natural gas unit is dangerous and will void your warranty.**
- ⚠ **Do not attempt to disconnect any gas fitting while your barbecue is in operation.**
- ⚠ **Use heat-resistant barbecue mitts or gloves when operating barbecue.**
- ⚠ **Keep any electrical supply cord and the fuel supply hose away from any heated surfaces.**
- ⚠ **Combustion byproducts produced when using this product contain chemicals known to the state of California to cause cancer, birth defects, or other reproductive harm.**
- ⚠ **Do not use this barbecue unless all parts are in place. The unit must be properly assembled according to the assembly instructions.**
- ⚠ **Do not build this model of grill in any built-in or slide-in construction. Ignoring this Warning could cause a fire or an explosion that can damage property and cause serious bodily injury or death.**
- ⚠ **Proposition 65 Warning: Handling the brass material on this product exposes you to lead, a chemical known to the state of California to cause cancer, birth defects or other reproductive harm.**
  (Wash hands after handling this product.) ◆

LIQUID PROPANE GAS UNITS ONLY:

- ⚠ **Use the pressure regulator and hose assembly that is supplied with your Weber® gas barbecue.**
- ⚠ **Do not attempt to disconnect the gas regulator and hose assembly or any gas fitting while your barbecue is in operation.**
- ⚠ **A dented or rusty liquid propane cylinder may be hazardous and should be checked by your liquid propane supplier. Do not use a liquid propane cylinder with a damaged valve.**
- ⚠ **Although your liquid propane cylinder may appear to be empty, gas may still be present, and the cylinder should be transported and stored accordingly.**
- ⚠ **If you see, smell or hear the hiss of escaping gas from the liquid propane cylinder:**
  1. **Move away from liquid propane cylinder.**
  2. **Do not attempt to correct the problem yourself.**
  3. **Call your fire department.** ◆

TABLE OF CONTENTS

WARNINGS 2

TABLE OF CONTENTS 3

EXPLODED VIEW 4

EXPLODED VIEW LIST 5

WARRANTY 6

GENERAL INSTRUCTIONS 7

CANADIAN INSTALLATION 7
STORAGE AND/OR NONUSE 7
OPERATING 7
GAS SUPPLY TESTING 7

GAS INSTRUCTIONS 8

INSTALL GAS SUPPLY 8
TYPE OF GAS 9
WHAT IS NATURAL GAS? 9
PORTABLE INSTALLATION 9
LEAK CHECK PREPARATION 10
CHECK THE FLEXIBLE HOSE TO MANIFOLD CONNECTION 11
CHECK FOR GAS LEAKS 11

LIGHT FEATURES 13

WEBER® GRILL OUT™ HANDLE LIGHT 13

BEFORE USING YOUR GRILL 13

SLIDE OUT GREASE TRAY AND DISPOSABLE DRIP PAN 13
HOSE INSPECTION 13

SNAP IGNITION OPERATION 14

MAIN BURNER IGNITION & USAGE 15

MAIN BURNER IGNITION 15
TO EXTINGUISH 15
MAIN BURNER MANUAL IGNITION 16
TO EXTINGUISH 16

GRILLING TIPS & HELPFUL HINTS 17

PREHEATING 17
COVERED COOKING 17
DRIPPINGS AND GREASE 17
FLAVORIZER® SYSTEM 17

COOKING METHODS 18

DIRECT COOKING 18
INDIRECT COOKING 18

SIDE BURNER IGNITION & USAGE 19

SIDE BURNER IGNITION 19
TO EXTINGUISH 19
SIDE BURNER MANUAL IGNITION 20
TO EXTINGUISH 20

TROUBLESHOOTING 21

SIDE BURNER TROUBLESHOOTING 21

GRILL OUT™ HANDLE LIGHT TROUBLESHOOTING 21

MAINTENANCE 22

CLEANING 22
WEBER® SPIDER/INSECT SCREENS 22
BURNER TUBE CLEANING 22
REPLACING MAIN BURNERS 23
SIDE BURNER MAINTENANCE 24
ANNUAL MAINTENANCE 25

EXPLODED VIEW

SUMMIT_620_NG_US_012011

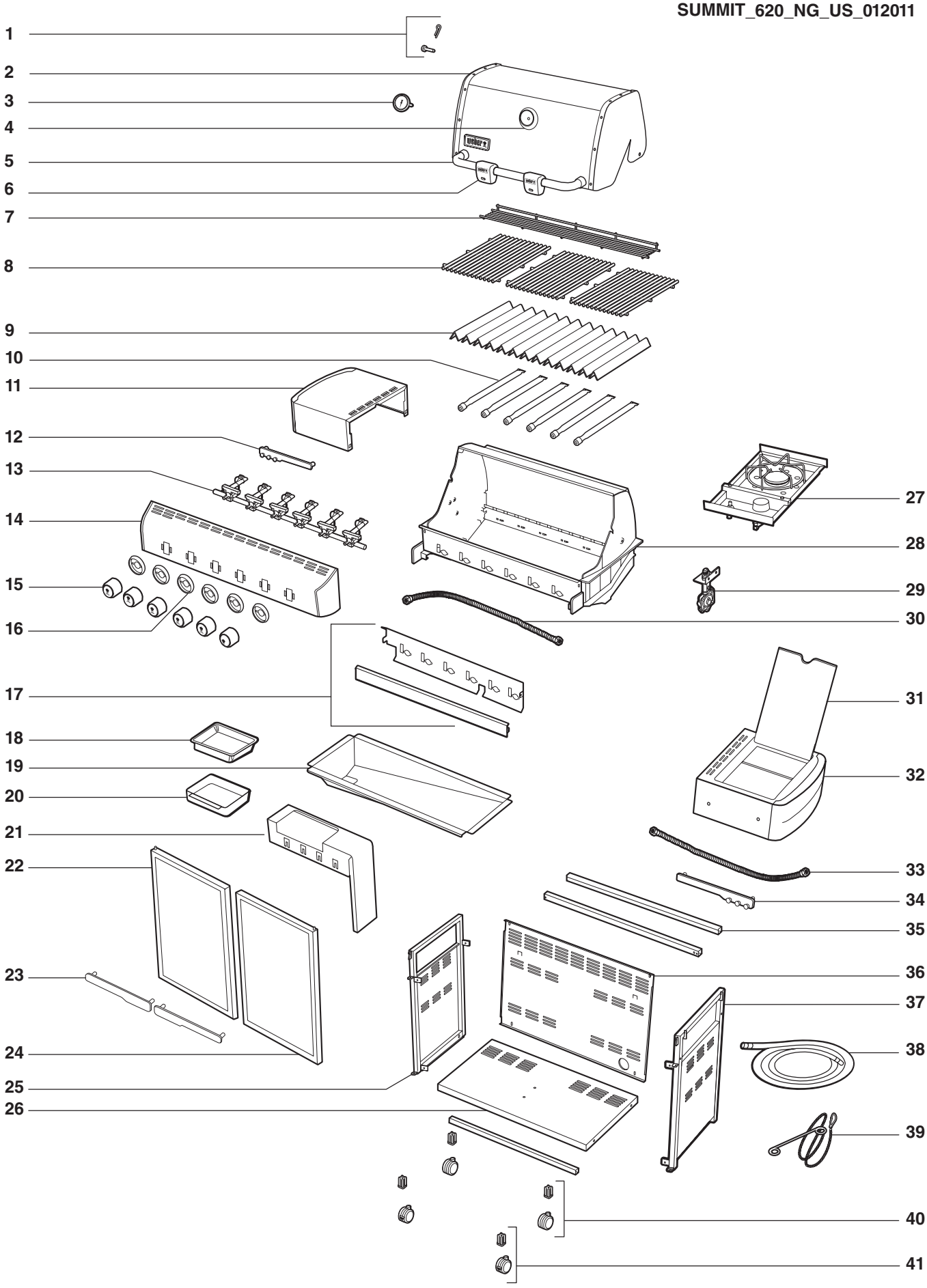

EXPLODED VIEW LIST

1. Shroud Hardware
2. Shroud
3. Thermometer
4. Thermometer Bezel
5. Handle
6. Grill Out™ Handle Light
7. Warming Rack
8. Cooking Grate
9. Flavorizor® Bar
10. Burner Tube
11. Side Table
12. Left Tool Holder
13. Manifold
14. Control Panel
15. Knob
16. Knob Bezel
17. Water Baffle / Heat Shield
18. Disposable Drip Pan
19. Slide Out Grease Tray
20. Catch Pan
21. Catch Pan Holder
22. Left Door
23. Door Handle
24. Right Door
25. Left Frame Panel
26. Bottom Panel
27. Side Burner
28. Cookbox
29. Bulkhead
30. Manifold Hose
31. Side Burner Lid
32. Side Burner Table
33. Side Burner Hose
34. Right Tool Holder
35. Frame Support
36. Back Panel
37. Right Frame Panel
38. Natural Gas Hose
39. Matchstick Holder
40. Caster
41. Locking Caster

WARRANTY

Weber-Stephen Products LLC (Weber) hereby warrants to the ORIGINAL PURCHASER of this Weber® gas grill that it will be free of defects in material and workmanship from the date of purchase as follows:

Aluminum castings:	25 years (2 years on paint; excludes fading)
Stainless steel shroud:	25 years
Porcelain-enameled shroud:	25 years
Stainless steel burner tubes:	10 years
Stainless steel cooking grates:	5 years no rust through or burn through
Stainless steel Flavorizer® bars:	5 years no rust through or burn through
Porcelain-enameled cast-iron cooking grates:	5 years no rust through or burn through
Porcelain-enameled cooking grates:	3 years no rust through or burn through
Porcelain-enameled Flavorizer® bars:	2 years no rust through or burn through
Infrared rotisserie burner:	2 years
All remaining parts:	2 years

when assembled and operated in accordance with the printed instructions accompanying it. Weber may require reasonable proof of your date of purchase. THEREFORE, YOU SHOULD RETAIN YOUR SALES SLIP OR INVOICE.

This Limited Warranty shall be limited to the repair or replacement of parts that prove defective under normal use and service and which on examination shall indicate, to Weber's satisfaction, they are defective. Before returning any parts, contact the Customer Service Representative in your area using the contact information on our website. If Weber confirms the defect and approves the claim, Weber will elect to replace such parts without charge. If you are required to return defective parts, transportation charges must be prepaid. Weber will return parts to the purchaser, freight or postage prepaid.

This Limited Warranty does not cover any failures or operating difficulties due to accident, abuse, misuse, alteration, misapplication, vandalism, improper installation or improper maintenance or service, or failure to perform normal and routine maintenance, including but not limited to damage caused by insects within the burner tubes, as set out in this owner's manual.

Deterioration or damage due to severe weather conditions such as hail, hurricanes, earthquakes or tornadoes, discoloration due to exposure to chemicals either directly or in the atmosphere, is not covered by this Limited Warranty.

There are no other express warrants except as set forth herein and any applicable implied warranties of merchantability and fitness are limited in duration to the period of coverage of this express written Limited Warranty. Some regions do not allow limitation on how long an implied warranty lasts, so this limitation may not apply to you.

Weber is not liable for any special, indirect or consequential damages. Some regions do not allow the exclusion or limitation of incidental or consequential damages, so this limitation or exclusion may not apply to you.

Weber does not authorize any person or company to assume for it any other obligation or liability in connection with the sale, installation, use, removal, return, or replacement of its equipment; and no such representations are binding on Weber.

This Warranty applies only to products sold at retail.

WEBER-STEPHEN PRODUCTS LLC
Customer Service Center
1890 Roselle Road, Suite 308
Schaumburg, IL 60195
USA

For replacement parts call:
1-800-446-1071

Visit www.weber.com®, select your country of origin, and register your grill today. ◆

GENERAL INSTRUCTIONS

Your Weber® gas barbecue is a portable outdoor cooking appliance. With the Weber® gas barbecue you can grill, barbecue, roast and bake with results that are difficult to duplicate with indoor kitchen appliances. The closed lid and Flavorizer® bars produce that “outdoor” flavor in the food.

The Weber® gas barbecue is portable so you can easily change its location in your yard or on your patio. Portability means you can take your Weber® gas barbecue with you if you move.

The natural gas supply is easy to use and gives you more cooking control than charcoal fuel.

- These instructions will give you the minimum requirements for assembling your Weber® gas barbecue. Please read the instructions carefully before using your Weber® gas barbecue. Improper assembly can be dangerous.
- Not for use by children.
- If there are local codes that apply to portable gas grills, you will have to conform to them. Installation must conform with local codes or, in the absence of local codes, with either the National Fuel Gas Code, ANSI Z223.1/NFPA 54, Natural Gas and Propane Installation Code, CSA B149.1, or Propane Storage and Handling Code, B149.2, or the Standard for Recreational Vehicles, ANSI A 119.2/NFPA 1192, and CSA Z240 RV Series, Recreational Vehicle Code, as applicable.
- This Weber® gas barbecue is designed for natural (piped in city) gas only. Do not use liquid propane (LP) bottled gas. The valves, orifices and hose are for natural gas only.
- Do not use with charcoal fuel.
- Check that the area under the control panel and the grease tray are free from debris that might obstruct the flow of combustion or ventilation air. ◆

CANADIAN INSTALLATION

These instructions, while generally acceptable, do not necessarily comply with the Canadian Installation codes, particularly with piping above and below ground. In Canada the installation of this appliance must comply with local codes and/or Standards CAN/CGA-B149.1 (Installation Code for Natural Gas Burning Appliances and Equipment). ◆

STORAGE AND/OR NONUSE

- The gas must be turned off at the natural gas supply when the Weber® gas barbecue is not in use.
- When the Weber® gas barbecue is stored indoors, the gas supply must be disconnected.
- The Weber® gas barbecue should be checked for gas leaks and any obstructions in the burner tubes before using. (Refer to: “MAINTENANCE/ANNUAL MAINTENANCE”).
- Check that the areas under the control panel and the slide out grease tray are free from debris that might obstruct the flow of combustion or ventilation air.
- The Spider/Insect screens should also be checked for any obstructions. (Refer to: “MAINTENANCE/ANNUAL MAINTENANCE”). ◆

OPERATING

⚠ WARNING: Only use this barbecue outdoors in a well-ventilated area. Do not use in a garage, building, breezeway or any other enclosed area.

⚠ WARNING: Your Weber® gas barbecue shall not be used under overhead combustible construction.

⚠ WARNING: Your Weber® gas barbecue is not intended to be installed in or on recreational vehicles and/or boats.

⚠ WARNING: Do not use the barbecue within 24 inches of combustible materials. This includes the top, bottom, back or sides of the grill.

⚠ WARNING: The entire cookbox gets hot when in use. Do not leave unattended.

⚠ WARNING: Keep any electrical supply cord and the fuel supply hose away from any heated surface.

⚠ WARNING: Keep the cooking area clear of flammable vapors and liquids, such as gasoline, alcohol, etc., and combustible materials. ◆

GAS SUPPLY TESTING

- Disconnect your Weber® gas barbecue when the gas supply is being tested at high pressures. This appliance and its individual shutoff valve must be disconnected from the gas supply piping system during any pressure testing of that system at test pressures in excess of 1/2 psig (3.5 kPa).
- Turn off your Weber® gas barbecue when the gas supply is being tested at low pressures. This appliance must be isolated from the gas supply piping system by closing its individual manual shutoff valve during any pressure testing of the gas supply piping system at the pressure equal to or less than 1/2 psig (3.5 kPa). ◆

INSTALL GAS SUPPLY

General Specifications for Piping

Note: ***Contact your local municipality for building codes regulating outdoor gas barbecue installations. In absence of Local Codes, you must conform to the latest edition of the*** *National Fuel Gas Code: ANSI Z 223.1/NFPA 54, or CAN/CGA-B149.1, Natural Gas and Propane Installation Code.* ***WE RECOMMEND THAT THIS INSTALLATION BE DONE BY A PROFESSIONAL.***

Some of the following are general requirements taken from the latest edition of the National Fuel Gas Code: ANSI Z 223.1/NFPA 54, or CAN/CGA-B149.1, Natural Gas and Propane Installation Code for complete specifications.

- This barbecue is designed to operate at 4.5" of water column pressure (.163 psi).
- A manual shut-off valve must be installed outdoors, immediately ahead of the quick disconnect.
- An additional manual shut-off valve indoors should be installed in the branch fuel line in an accessible location near the supply line.
- The quick disconnect connects to a 1/2" NPT thread from the gas source. The quick disconnect fitting is a hand-operated device that automatically shuts off the flow of gas from the source when the barbecue is disconnected.
- The quick disconnect fitting can be installed horizontally, or pointing downward. Installing the fitting with the open end pointing upward can result in collecting water and debris.
- The dust covers (supplied plastic plugs) help keep the open ends of the quick disconnect fitting clean while disconnected.
- Pipe compound should be used which is resistant to the action of natural gas when connections are made.
- The outdoor connector must be firmly attached to rigid, permanent construction.

⚠ WARNING: Do not route the 10 foot hose under a deck. The hose must be visible.

Gas Line Piping

- For the correct size and length of gas line piping refer to the latest edition of the National Fuel Gas Code: ANSI Z 223.1/NFPA 54, or CAN/CGA-B149.1, Natural Gas and Propane Installation Code.
- Gas piping may be copper tubing, type K or L; polyethylene plastic tube, with a minimum wall thickness of .062"; or standard weight (schedule 40) steel or wrought iron pipe.
- Copper tubing must be tin-lined if the gas contains more than 0.3 grams of hydrogen sulfide per 100 cubic feet of gas.
- Plastic tubing is suitable only for outdoor, underground use.
- Gas piping in contact with earth, or any other material which may corrode the piping, must be protected against corrosion in an approved manner.
- Underground piping must have a minimum of 18" cover.

Test Connections

All connections and joints must be thoroughly tested for leaks in accordance with local codes and all listed procedures in the latest edition of the National Fuel Gas Code: ANSI Z 223.1/NFPA 54, or CAN/CGA-B149.1.

⚠ DANGER

Do not use an open flame to check for gas leaks. Be sure there are no sparks or open flames in the area while you check for gas leaks. This will result in a fire or explosion which can cause serious bodily injury or death and damage to property. ◆

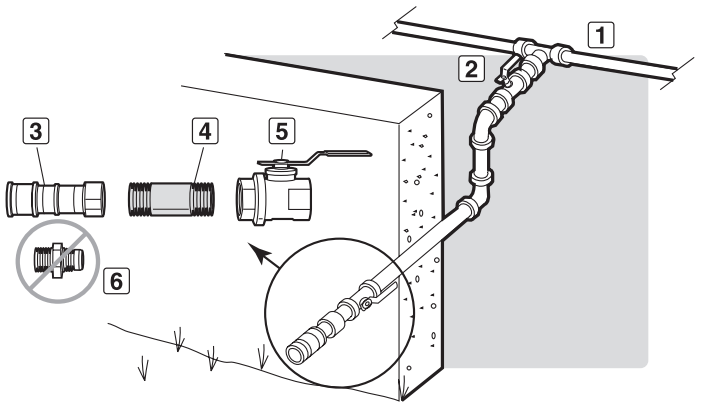

This is a typical installation of a Weber® natural gas barbecue. Local codes may require different installations.

INSIDE WALL			
1	Gas Supply	2	Shut Off
OUTSIDE WALL			
3	Quick-Disconnect	4	1/2" Pipe Nipple
5	Locking Shut Off	6	Do Not Use

GAS INSTRUCTIONS

TYPE OF GAS

Your natural gas grill is factory built to operate using natural gas only. Never attempt to operate your grill on gases other than the type specified on the grill rating plates.

Your grill operates at 4.5" of water column pressure. If replacement of the hose becomes necessary, factory specified parts are required. See your local dealer.

For safety and design reasons, the conversion of a Weber® grill from operation using Natural gas to operation using LP gas is not allowed. ◆

WHAT IS NATURAL GAS?

Natural gas, often called methane, is a safe modern fuel. Natural gas is supplied by your local utility and should be readily available if your house is already heated with gas. ◆

PORTABLE INSTALLATION

Weber® recommends moving the grill at least two feet from the gas supply and any combustible surfaces. After the gas supply has been run and checked for leaks in accordance to the assembly instructions, you are ready to grill. To connect the hose to the gas supply, pull back the outer fitting, insert the hose fitting all of the way, and release the outer fitting. This process will produce a gas joint. ◆

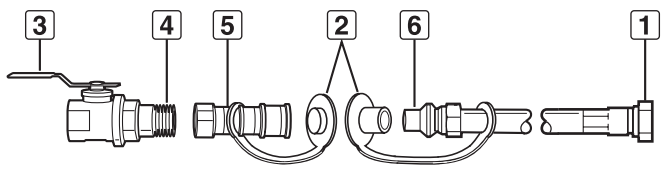

1	Swivel connection
2	Install covers when hose is disconnected
3	Shut-off valve
4	Coat this pipe nipple with gas-resistant pipe dope
5	Socket
6	Male connection

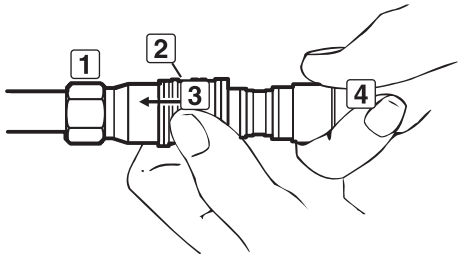

1	Socket
2	Sleeve
3	Push sleeve back
4	Plug

Push plug until sleeve snaps forward, locking plug in socket.
(This turns on gas automatically.)

When properly assembled, the plug cannot be removed without pushing the sleeve back.

To disconnect, push sleeve back and pull out plug.
(This automatically shuts off gas.)

LEAK CHECK PREPARATION

Check That All Burner Valves Are Off

Valves are shipped in the OFF position, but you should check to be sure that they are turned off. Check by pushing in and turning clockwise. If they do not turn, they are off. If they do turn continue turning them clockwise until they stop, then they are off.

⚠ **WARNING: The gas connections of your Summit® gas grill have been factory tested. We do however recommend that you leak check all gas connections before operating your Summit® gas grill.**

Remove Control Panel

Parts required: Phillips screwdriver and a towel.

A) Remove the burner control knobs **(1)**.
B) Open both doors and place a towel on top of the doors. This will protect the control panel and tops of the doors from getting scratched on the next step.
C) Remove the screws from the underside of the control panel with a Phillips screwdriver **(2)**.
D) Tilt the control panel forward and lift up and away from the grill **(3)**. (For Summit® models with LED features: Be careful not to break or disconnect the wires for the control panel LEDs.)
E) Place the control panel on the towel covering the door assemblies **(4)**. ◆

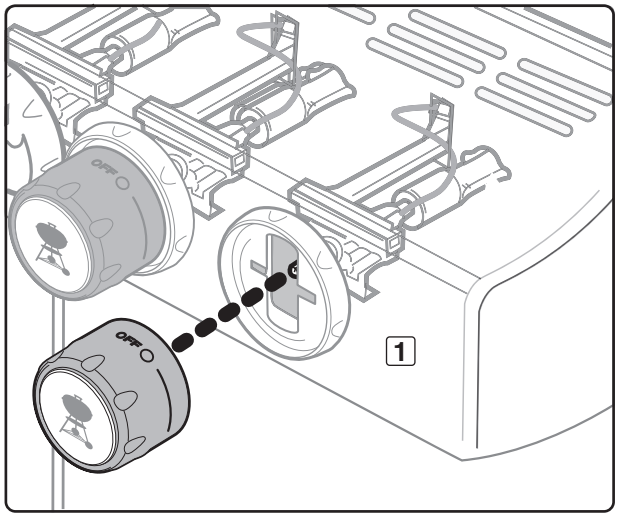

The grill illustrated may have slight differences than the model purchased.

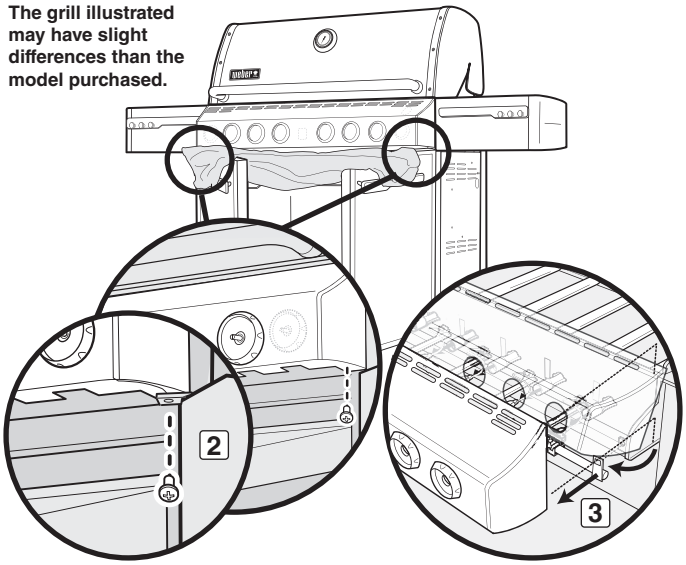

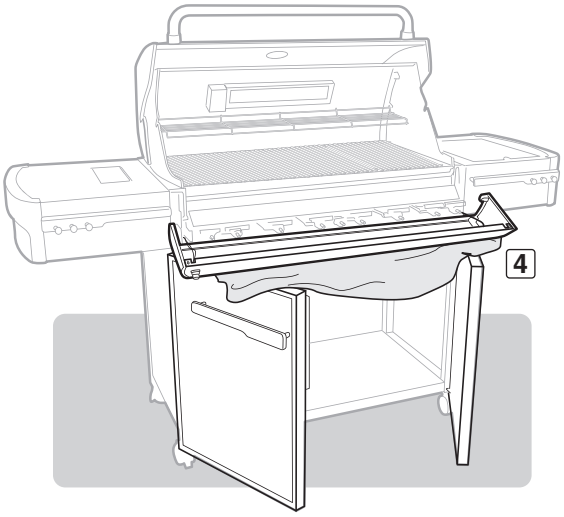

GAS INSTRUCTIONS

CHECK THE FLEXIBLE HOSE TO MANIFOLD CONNECTION

The natural gas hose was attached during the manufacturing process. We do recommend that the hose to gas manifold connection be leak tested, following guidelines in this Owner's Guide, prior to barbecue operation. ◆

CHECK FOR GAS LEAKS

⚠ DANGER

Do not use an open flame to check for gas leaks. Be sure there are no sparks or open flames in the area while you check for leaks. Sparks or open flames will result in a fire or explosion which can cause serious bodily injury or death and damage to property.

Note: All factory-made connections have been thoroughly checked for gas leaks. The burners have been flame-tested. As a safety precaution, however, you should recheck all fittings for leaks before using your Weber® gas barbecue. Shipping and handling may loosen or damage a gas fitting.

⚠ WARNING: The gas connections of your gas grill have been factory tested. We do however recommend that you leak check all gas connections before operating your gas grill.

⚠ WARNING: Perform these leak checks even if your barbecue was dealer or store assembled.

If your grill has a side burner, make sure the side burner is turned off.

To perform leak checks: Slide back the collar of the quick disconnect **(1)**. Push male fitting of the hose into the quick disconnect, and maintain pressure. Slide the collar closed **(2)**. If it does not engage or lock, repeat procedure. Gas will not flow unless the quick disconnect is properly engaged.

Turn on gas supply at source.

⚠ WARNING: Do not ignite burners when leak checking.

You will need: A soap and water solution and a rag or brush to apply it.

A) Mix soap and water.
B) Turn on the gas supply **(3)**.
C) Check for leaks by wetting the fitting with the soap and water solution and watching for bubbles. If bubbles form, or if a bubble grows, there is a leak.

If there is a leak, turn off the gas and tighten the fitting. Turn the gas back on and recheck with the soap and water solution. If leak does not stop do not use the barbecue. Contact the customer service representative in your area using the contact information on our web site. Log onto www.weber.com®.

D) When leak checking is complete, turn gas supply off at the source and rinse connections with water.

Note: Since some leak test solutions, including soap and water, may be slightly corrosive, all connections should be rinsed with water after checking for leaks.

⚠ WARNING: You should check for gas leaks every time you disconnect and reconnect a gas fitting.

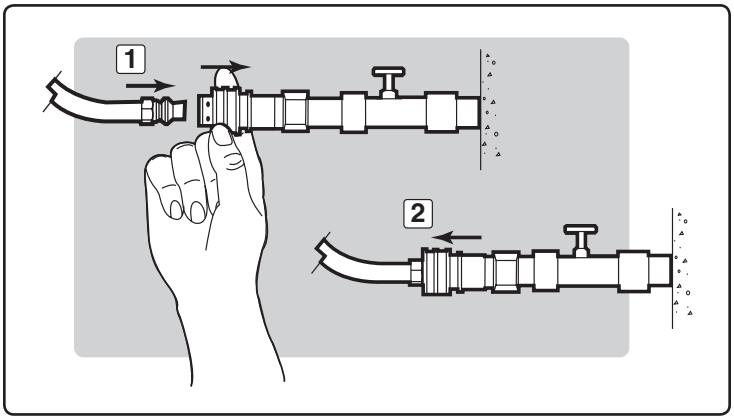

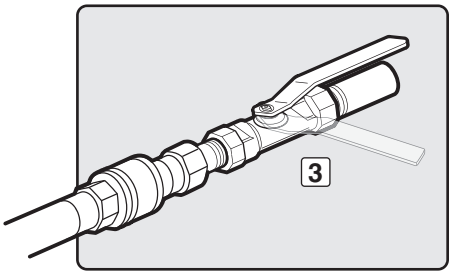

GAS INSTRUCTIONS

Check

A) Bulkhead and gas supply hose connection **(1)**.
B) Bulkhead to regulator connection **(2)**.
C) Regulator to hose connection **(3)**.
D) Main gas line to manifold connections **(4)**.
E) Side burner hose to bulkhead connection **(5)**.

⚠ **WARNING: If there is a leak at connection (1, 2, 3, 4, or 5), retighten the fitting with a wrench and recheck for leaks with soap and water solution. If a leak persists after re-tightening the fitting, turn off the gas. DO NOT OPERATE THE GRILL. Contact the Customer Service Representative in your area using the contact information on our web site. Log onto www.weber.com®.**

F) Side burner hose to quick disconnect connection, side burner valve and orifice connections **(6)**.
G) Hose to quick disconnect connection **(7)**.
H) Valves to manifold connections **(8)**.

⚠ **WARNING: If there is a leak at connections (6, 7, or 8), turn off the gas. DO NOT OPERATE THE GRILL. Contact the Customer Service Representative in your area using the contact information on our web site. Log onto www.weber.com®.**

When leak checks are complete, turn gas supply off at the source and rinse connections with water.

Reinstall Control Panel

Parts required: control panel, screws and burner control knobs.

A) Hook the top edge of the control panel onto the control panel brackets on either side of the front of the cookbox.
B) Line up screws with screw holes on both the control panel bracket and the frame.
C) Tighten screws.
D) Place corresponding control knobs onto the valve stems. ◆

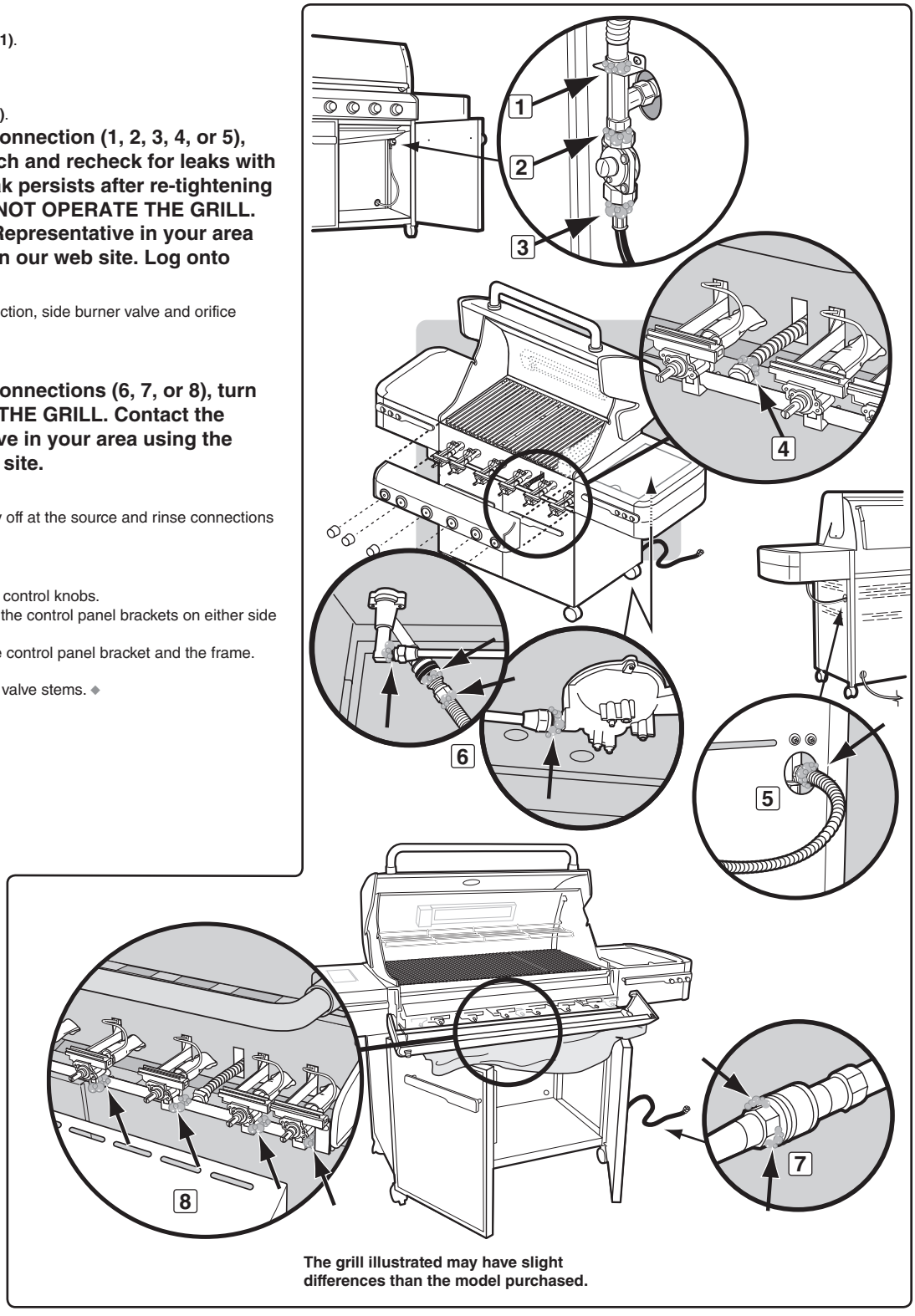

The grill illustrated may have slight differences than the model purchased.

LIGHT FEATURES

WEBER® GRILL OUT™ HANDLE LIGHT

The Weber Grill Out™ Handle Light has a built-in "Tilt Sensor." With the power button **(1)** activated, the light will come on when the grill lid is open. The light will turn off when the lid is closed. For daytime use, deactivate the sensor by pressing power button **(1)**. ◆

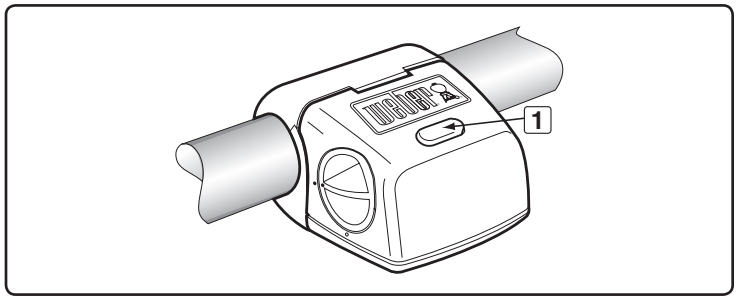

BEFORE USING YOUR GRILL

SLIDE-OUT GREASE TRAY AND DISPOSABLE DRIP PAN

Your grill was built with a grease collection system. Check the slide-out grease tray and disposable drip pan for grease build-up each time you use your grill.

Remove excess grease with a plastic spatula; see illustration. When necessary, wash the grease tray and drip pan with a soap and water solution, then rinse with clean water. Replace the disposable drip pan as needed.

⚠ **WARNING: Check the slide-out grease tray and disposable drip pan for grease build-up before each use. Remove excess grease to avoid a grease fire. A grease fire can cause serious bodily injury or damage to property.**

⚠ **CAUTION: Do not line the slide-out grease tray with aluminum foil.** ◆

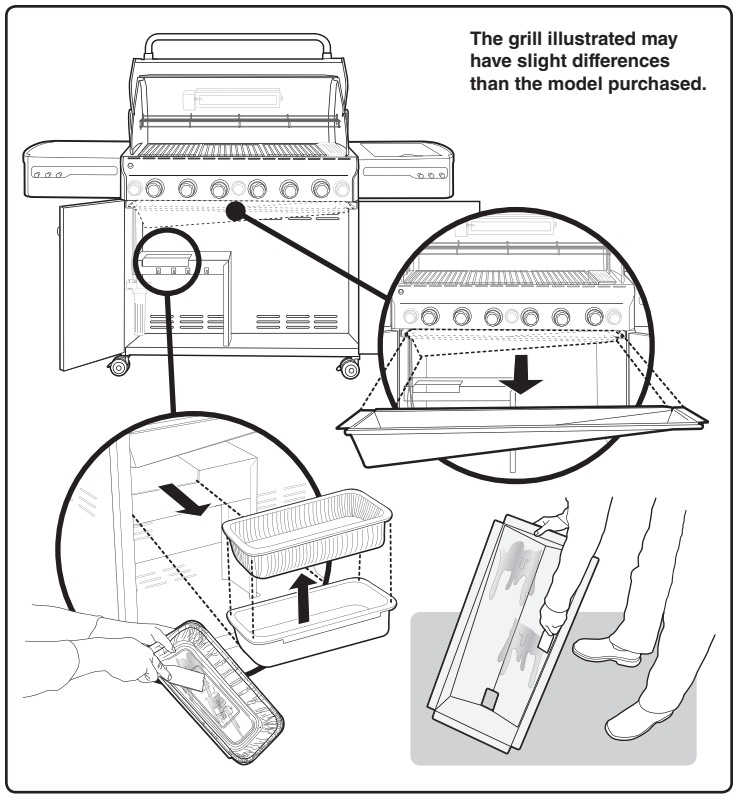

HOSE INSPECTION

The hose should be inspected for any signs of cracking.

⚠ **WARNING: Check hose before each use of barbecue for nicks, cracking, abrasions or cuts. If the hose is found to be damaged in any way, do not use the barbecue. Replace using only Weber® authorized replacement hose. Contact the Customer Service Representative in your area using the contact information on our web site.**
Log onto www.weber.com®. ◆

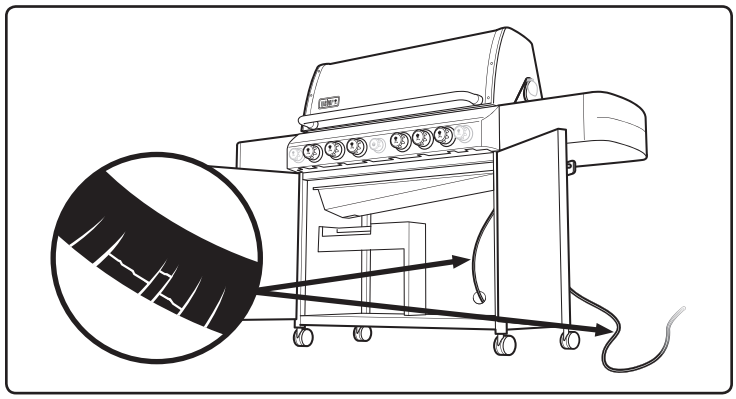

SNAP IGNITION OPERATION

⚠ **Always open the lid before igniting the burners.**

A) Each control knob has its own igniter electrode built in. To create a spark, you must push the control knob in **(1)** and turn it to START/HI **(2)**.

B) This action will generate gas flow and a spark to the burner lighting tube **(3)**. You will hear a “snap” from the igniter. You will also see a 3" – 5" orange flame coming from the burner lighting tube at the left side of the burner **(4)**.

C) **Continue to hold the burner control knob in for two seconds after the “snap.”** This will allow gas to flow completely down the burner tube **(5)** and ensure ignition.

D) Check that the burner is lit by looking through the cooking grates. You should see a flame. If burner does not light on first try, push control knob in and turn it to OFF. Repeat lighting procedure a second time.

⚠ **WARNING: If the burner still does not light, turn the burner control knob to OFF and wait five minutes to let the gas clear before you try again or try to light with a match.** ◆

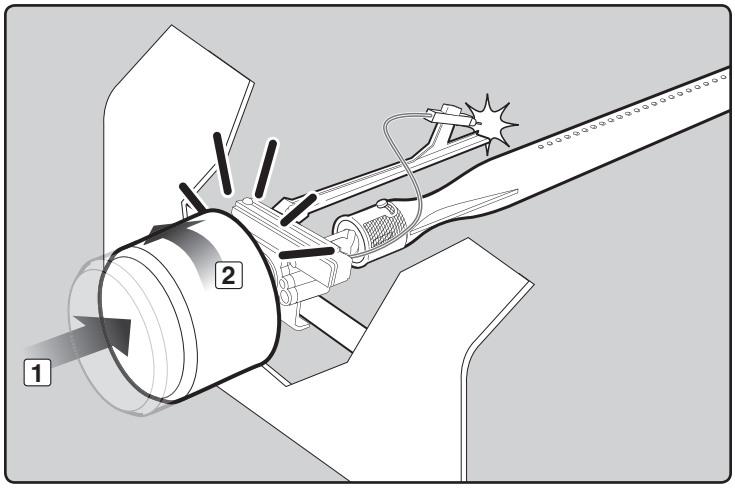

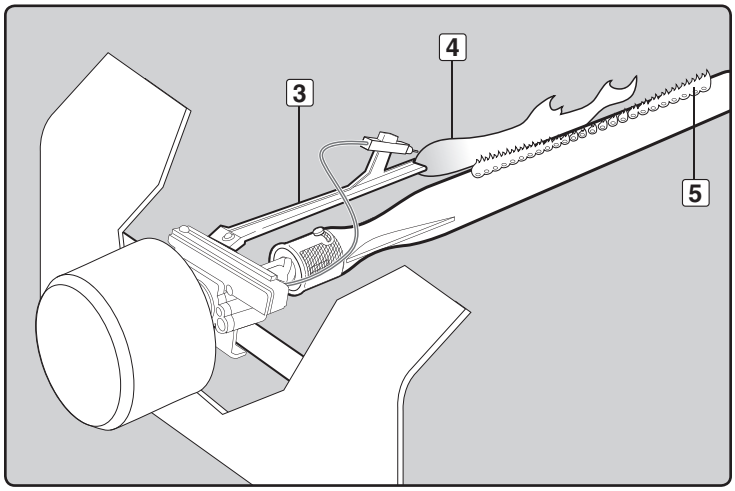

MAIN BURNER IGNITION & USAGE

MAIN BURNER IGNITION

Summary lighting instructions are inside the left-hand cabinet door.

⚠ DANGER

Failure to open the lid while igniting the barbecue's burners, or not waiting five minutes to allow the gas to clear if the barbecue does not light, may result in an explosive flame-up which can cause serious bodily injury or death.

Main Burner Snap Ignition

Note: Each control knob snap igniter creates a spark from the igniter electrode to the burner lighting tube. You generate the energy for the spark by pushing in the control knob and turning it to START/HI. This will ignite each individual burner.

⚠ WARNING: Check hose before each use of barbecue for nicks, cracking, abrasions or cuts. If the hose is found to be damaged in any way, do not use the barbecue. Replace using only Weber® authorized replacement hose. Contact the Customer Service Representative in your area using the contact information on our web site. Log onto www.weber.com®.

A) Open the lid **(1)**.
B) Make sure all burner control knobs are turned to OFF **(2)**. (Push control knob in and turn it clockwise to ensure that it is in the OFF position.)
C) Turn on the gas supply at source **(3)**.

⚠ WARNING: Do not lean over the open barbecue.

D) Push the control knob in and turn it to START/HI until you hear the igniter snap; continue to hold control knob in for two seconds **(4)**. This action will spark the igniter, the burner lighting tube, and then main burner.
E) Check that the burner is lit by looking through the cooking grates **(5)**. You should see a flame. If burner does not light on first try, push control knob in and turn it to OFF. Repeat lighting procedure a second time.

⚠ WARNING: If the burner still does not light, turn the burner control knob to OFF and wait five minutes to let the gas clear before you try again or try to light with a match. ◆

TO EXTINGUISH

Push in and turn each burner control knob clockwise to OFF position. Turn gas supply off at the source. ◆

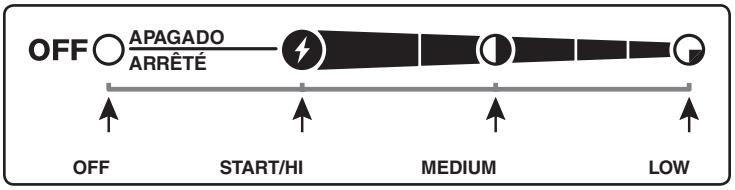

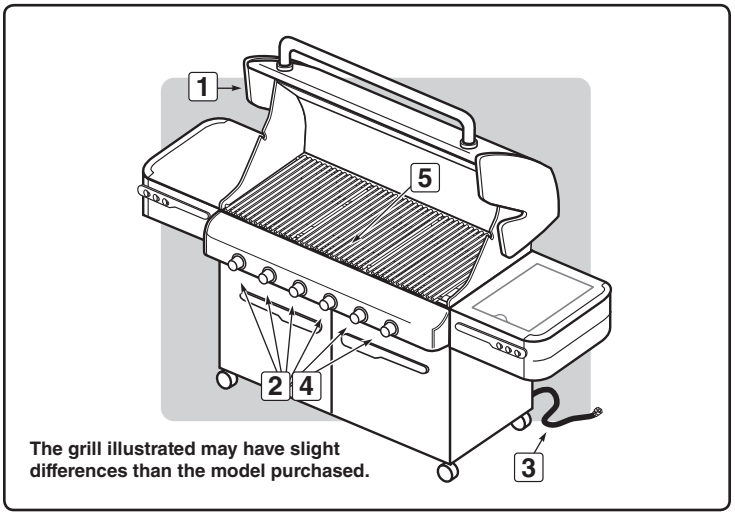

The grill illustrated may have slight differences than the model purchased.

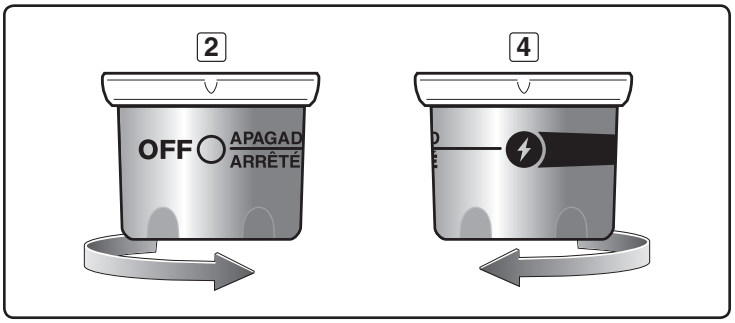

MAIN BURNER IGNITION & USAGE

MAIN BURNER MANUAL IGNITION

⚠ DANGER

Failure to open the lid while igniting the barbecue's burners, or not waiting five minutes to allow the gas to clear if the barbecue does not light, may result in an explosive flare-up which can cause serious bodily injury or death.

A) Open the lid **(1)**.
B) Make sure all burner control knobs are turned to OFF **(2)**. (Push each knob in and turn it clockwise to ensure it is in the OFF position.)
C) Turn on the gas supply at source **(3)**.
D) Put match in the matchstick holder and strike match.

⚠ WARNING: Do not lean over open barbecue.

E) Insert matchstick holder and lit match down through cooking grates and Flavorizer® bars to ignite the selected burner **(4)**.
F) Push the control knob in and turn it to START/HI **(5)**.

⚠ WARNING: If the burner does not light, turn burner control knob to OFF and wait five minutes to let the gas clear before you try again. ◆

TO EXTINGUISH

Push in and turn each burner control knob clockwise to OFF position. Turn gas supply off at the source. ◆

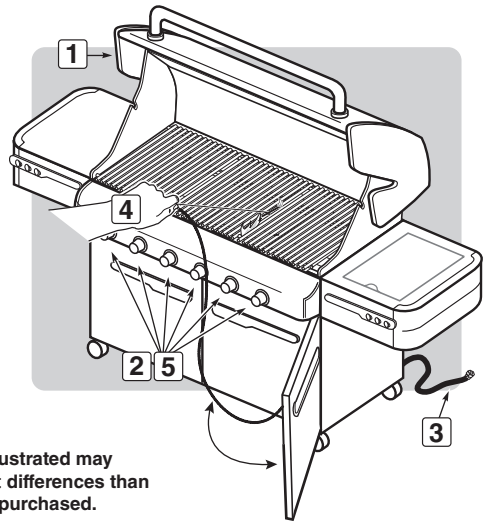

The grill illustrated may have slight differences than the model purchased.

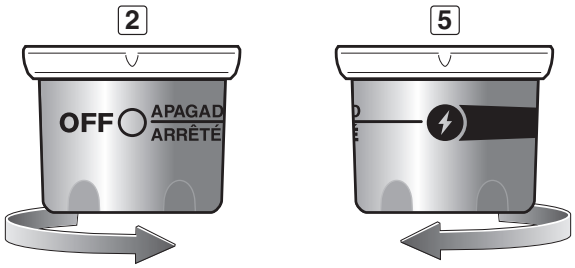

GRILLING TIPS & HELPFUL HINTS

- Always preheat the grill before cooking. Set all burners on HI heat and close lid; heat for 10 minutes, or until thermometer registers 500°-550° F (260°-288°C).
- Sear meats and cook with the lid down for perfectly grilled food every time.
- Grilling times in recipes are based on 70°F (20°C) weather and little or no wind. Allow more cooking time on cold or windy days, or at higher altitudes. Allow less cooking time in extremely hot weather.
- Grilling times can vary because of the weather, or the amount, size and shape of the food being grilled.
- The temperature of your gas grill may run hotter than normal for the first few uses.
- Grilling conditions may require the adjustment of the burner controls to attain the correct cooking temperatures.
- In general, large pieces of meat will require more cooking time per pound than small pieces of meat. Foods on a crowded cooking grate will require more cooking time than just a few foods. Foods grilled in containers, such as baked beans, will require more time if grilled in a deep casserole rather than a shallow baking pan.
- Trim excess fat from steaks, chops and roasts, leaving no more than a scant ¼ inch (6.4mm) of fat. Less fat makes cleanup easier, and is a virtual guarantee against unwanted flare-ups.
- Foods placed on the cooking grate directly above burners may require turning or moving to a less hot area.
- Use tongs rather than a fork for turning and handling meats to avoid losing natural juices. Use two spatulas for handling large whole fish.
- If an unwanted flare-up should occur, turn all burners off and move food to another area of the cooking grate. Any flames will quickly subside. After flames subside, relight the grill. NEVER USE WATER TO EXTINGUISH FLAMES ON A GAS GRILL.
- Some foods, such as a casserole or thin fish fillets, will require a container for grilling. Disposable foil pans are very convenient, but any metal pan with ovenproof handles can also be used.
- Always be sure the slide out grease tray and catch pan are clean and free from debris.
- Do not line the slide out grease tray with foil. This could prevent the grease from flowing into the catch pan.
- Using a timer will help to alert you when “well-done” is about to become “over-done.”

Note: If grill looses heat while cooking refer to the troubleshooting section of this manual.

⚠ WARNING: Do not move the Weber® gas barbecue when operating or while barbecue is hot.

You can adjust the individual burners as desired. The control settings are OFF, START/HI, MEDIUM, or LOW.

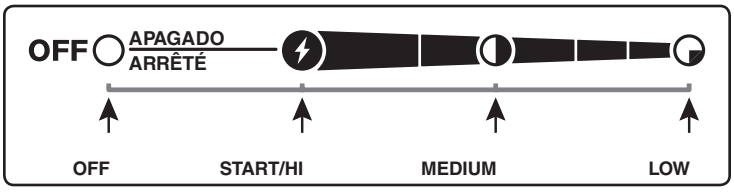

Note: The temperature inside your cookbox for the first few uses, while surfaces are still very reflective, may be hotter than those shown in your cookbook. Cooking conditions, such as wind and weather, may require the adjustment of the burner controls to obtain the correct cooking temperatures.

If burners go out during cooking, turn off all burners and wait five minutes before relighting. ◆

PREHEATING

Your Weber® gas barbecue is an energy-efficient appliance. It operates at an economical low BTU rate. Preheating the grill before grilling is important. Light your grill according to the instructions in this Owner’s Manual. To preheat: after lighting turn all burners to START/HI, close the lid, and heat until the temperature reaches between 500° and 550° F (260° and 290° C), the recommended broiling temperature. This will take 10 to 15 minutes depending on conditions such as air temperature and wind. ◆

COVERED COOKING

All grilling is done with the lid down to provide uniform, evenly circulated heat. With the lid closed, the gas grill cooks much like a convection oven. The thermometer in the lid indicates the cooking temperature inside the grill. All preheating and grilling is done with the lid down. No peeking — heat is lost every time you lift the lid. ◆

DRIPPINGS AND GREASE

The Flavorizer® bars are designed to “smoke” the correct amount of drippings for flavorful cooking. Excess drippings and grease will accumulate in the catch pan under the slide out grease tray. Disposable foil drip pans are available that fit the catch pan.

⚠ WARNING: Check the slide out grease tray and catch pan for grease build-up before each use. Remove excess grease to avoid a grease fire in the slide out grease tray. ◆

FLAVORIZER® SYSTEM

When meat juices drip from the food onto the specially angled Flavorizer® bars, they create smoke that gives foods an irresistible barbecued flavor. Thanks to the unique design of the burners, Flavorizer® bars and the flexible temperature controls, uncontrolled flare-ups are virtually eliminated, because YOU control the flames. Because of the special design of the Flavorizer® bars and burners, excess fats are directed through the slide out grease tray into the grease catch pan. ◆

COOKING METHODS

The most important thing to know about grilling is which cooking method to use for a specific food, direct or indirect. The difference is simple: place the food directly over the fire, or arrange the fire on either side of it. Using the right method is the shortest route to great results—and the best way to ensure doneness safety. ◆

DIRECT COOKING

The direct method, similar to broiling, means the food is cooked directly over the heat source. For even cooking, food should be turned once halfway through the grilling time. Use the direct method for foods that take less than 25 minutes to cook: steaks, chops, kabobs, sausages, vegetables, and more.

Direct cooking is also necessary to sear meats. Searing creates that wonderful crisp, caramelized texture where the food touches the grate. It also adds great color and flavor to the entire surface. Steaks, chops, chicken breasts, and larger cuts of meat all benefit from searing.

To sear meats, place them over direct high heat for two to five minutes per side. Smaller pieces require less searing time. Usually after searing the food, you finish cooking it at a lower temperature. You can finish cooking fast-cooking foods by the direct method; use the indirect method for longer-cooking foods.

To set up your gas grill for direct cooking, preheat the grill with all burners on HI. Place food on the cooking grate, and then adjust all burners to the temperature noted in the recipe. Close the lid of the grill and lift it only to turn food or to test for doneness at the end of the recommended cooking time. ◆

INDIRECT COOKING

The indirect method is similar to roasting, but with the added benefits of that grilled texture, flavor, and appearance you can't get from cooking with an oven. To set up for indirect cooking, light gas burners on either side of the food but not directly beneath it. Heat rises, reflects off the lid and inside surfaces of the grill, and circulates to slowly cook the food evenly on all sides, much like a convection oven, so there's no need to turn the food.

Use the indirect method for foods that require 25 minutes or more of grilling time, or that are so delicate that direct exposure to the flame would dry them out or scorch them. Examples include roasts, ribs, whole chickens, turkeys, and other large cuts of meat, as well as delicate fish fillets.

To set up your gas grill for indirect cooking, preheat the grill with all burners on HI. Then adjust the burners on each side of the food to the temperature noted in the recipe, and turn off the burner(s) directly below the food. For best results, place roasts, poultry, or large cuts of meat on a roasting rack set inside a disposable, heavy-gauge foil pan. For longer cooking times, add water to the foil pan to keep drippings from burning. The drippings can be used to make gravies or sauces. ◆

6 BURNER

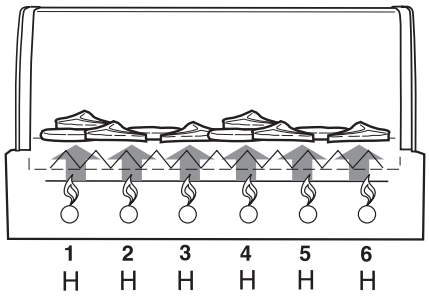

DIRECT METHOD

Food is placed on the area of the cooking grates directly over the lit burners

6 BURNER

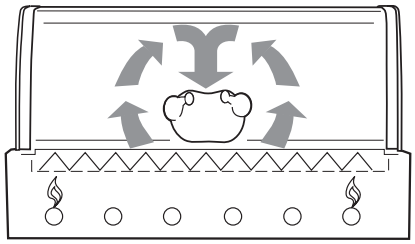

INDIRECT METHOD

Food is placed on the area of the cooking grates between the lit burners

SIDE BURNER IGNITION & USAGE

SIDE BURNER IGNITION

Summary lighting instructions are inside the left hand cabinet door.

⚠ DANGER

Failure to open the lid while igniting the side burner, or not waiting five minutes to allow the gas to clear if the side burner does not light, may result in an explosive flare-up which can cause serious bodily injury or death.

⚠ WARNING: Check hose before each use of barbecue for nicks, cracking, abrasions or cuts. If the hose is found to be damaged in any way, do not use the barbecue. Replace using only Weber® authorized replacement hose. Contact the Customer Service Representative in your area using the contact information on our web site.
Log onto www.weber.com®.

A) Open the side burner lid **(1)**.
B) Check that the side burner valve is turned off **(2)** (Push control knob in and turn clockwise to ensure that it is in the OFF position), turn all burners not being used to the OFF position (push in and turn clockwise).
C) Turn the gas supply valve on **(3)**.
D) Push down and turn the side burner control valve to START/HI **(4)**.
E) Press the igniter button several times so it clicks each time until you see a flame **(5)**.

⚠ CAUTION: Side burner flame may be difficult to see on a bright sunny day.

⚠ WARNING: If the side burner does not light in five seconds:

a) Turn off the side burner control valve, main burners and gas supply at source.
b) Wait five minutes to let the gas clear before you try again, or try lighting with a match (refer to "SIDE BURNER MANUAL IGNITION"). ◆

TO EXTINGUISH

Push down and turn side burner control knob to the OFF position. Be sure the burner is off and cool before closing the side burner lid. ◆

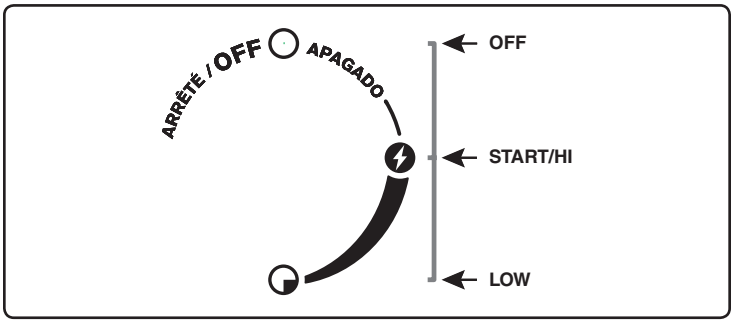

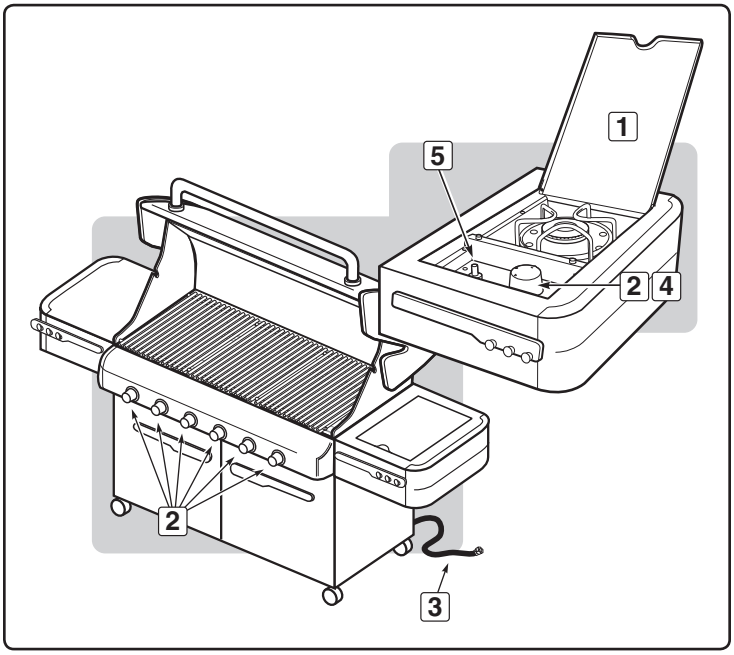

SIDE BURNER IGNITION & USAGE

SIDE BURNER MANUAL IGNITION

⚠ DANGER

Failure to open the lid while igniting the side burner, or not waiting five minutes to allow the gas to clear if the side burner does not light, may result in an explosive flare-up that can cause serious bodily injury or death.

A) Open the side burner lid **(1)**.
B) Check that the side burner valve is turned off **(2)** (Push control knob in and turn clockwise to ensure that it is in the OFF position), turn all burners not being used to the OFF position (push in and turn clockwise).
C) Turn the gas supply valve on **(3)**.
D) Put match in a match holder and strike match.
E) Hold match holder and lit match by either side of the side burner **(4)**.
F) Push down and turn the side burner control valve to START/HI **(5)**.

⚠ CAUTION: Side burner flame may be difficult to see on a bright sunny day.

⚠ WARNING: If the side burner does not light in five seconds:

a) Turn off the side burner control valve, main burners and gas supply at source.

b) Wait five minutes to let the gas clear before you try again. ◆

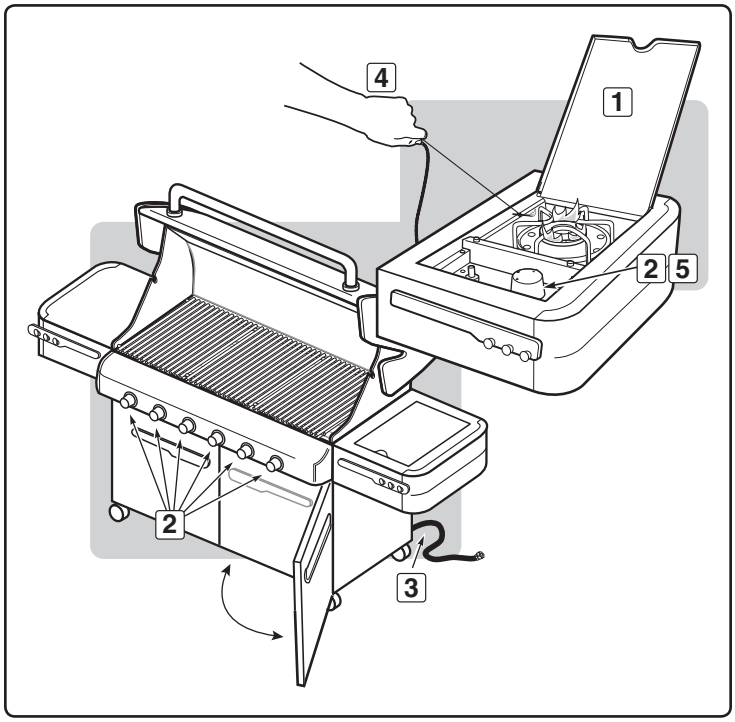

TO EXTINGUISH

Push down and turn side burner control knob to the OFF position. Be sure the burner is off and cool before closing the side burner lid. ◆

TROUBLESHOOTING

PROBLEM	CHECK	SOLUTION
Burners burn with a yellow or orange flame, in conjunction with the smell of gas. (This is normal for the burner lighting tube.) **Symptoms:** **Burner does not light, or flame is low in HI position.**	Inspect spider/insect screens for possible obstructions. (Blockage of holes.)	Clean spider/insect screens (refer to "ANNUAL MAINTENANCE").
	Is fuel hose bent or kinked?	Straighten fuel hose.
	Does burner light with a match?	Clean burners (refer to "MAINTENANCE").
	Did you use the snap igniter several times until the main burner lit (refer to "MAIN BURNER IGNITION")?	Make sure to hold the control knob in for two seconds after snapping the igniter and seeing the orange flame from the burner lighting tube.
	Does the igniter work? Do you see a spark when you repeatedly use the snap igniter?	Try manually lighting the burner (refer to "MAIN BURNER MANUAL IGNITION"). Call Customer Service.
Experiencing flare-ups: **⚠ CAUTION: Do not line the slide out grease tray with aluminum foil.**	Are you preheating barbecue in the prescribed manner?	All burners on HI for 10 to 15 minutes for preheating.
	Are the cooking grates and Flavorizer® bars heavily coated with burned-on grease?	Clean thoroughly (refer to "CLEANING").
	Is the bottom tray "dirty" and not allowing grease to flow into catch pan?	Clean bottom tray.
Burner flame pattern is erratic. Flame is low when burner is on HI. Flames do not run the whole length of the burner tube.	Are burners clean?	Clean burners (refer to "MAINTENANCE").
Inside of lid appears to be "peeling." (Resembles paint peeling.)	The lid is porcelain enamel or stainless steel, not paint. It cannot "peel." What you are seeing is baked-on grease that has turned to carbon and is flaking off. **THIS IS NOT A DEFECT.**	Clean thoroughly (refer to "CLEANING").
Cabinet doors are not aligned.	Check the adjustment pin on the bottom of each door.	Loosen adjustment nut/s. Slide door/s until aligned. Tighten nut/s.
If problems cannot be corrected by using these methods, please contact the Customer Service Representative in your area using the contact information on our web site. Log onto www.weber.com®.		

SIDE BURNER TROUBLESHOOTING

PROBLEM	CHECK	SOLUTION
Side burner does not light.	Is gas supply off?	Turn supply on.
Flame is low in HI position.	Is the fuel hose bent or kinked?	Straighten hose.
Push button ignition does not work.	Does burner light with a match?	If match lights burner, check igniter. Refer to "SIDE BURNER MAINTENANCE."
If problems cannot be corrected by using these methods, please contact the Customer Service Representative in your area using the contact information on our web site. Log onto www.weber.com®.		

GRILL OUT™ HANDLE LIGHT TROUBLESHOOTING

PROBLEM	CHECK	SOLUTION
Weber Grill Out™ Handle Light does not light.	Are the batteries old?	Replace batteries.
	Are the batteries installed correctly?	Refer to assembly illustration.
	Is the lid in the up position with the power button ON?	Light will activate when lid is open.
	Is the Weber® Grill Out™ Handle Light activated?	Press the power button.
	Is the Weber® Grill Out™ Handle Light positioned correctly on the handle?	Adjust position. Refer to assembly illustration.
If problems cannot be corrected by using these methods, please contact the Customer Service Representative in your area using the contact information on our web site. Log onto www.weber.com®.		

MAINTENANCE

CLEANING

⚠ WARNING: Turn your Weber® gas barbecue off and wait for it to cool before cleaning.

⚠ CAUTION: Do not clean your Flavorizer® bars or cooking grates in a self-cleaning oven.

Outside surfaces — Use a warm soapy water solution to clean, then rinse with water.

⚠ CAUTION: Do not use oven cleaner, abrasive cleansers (kitchen cleansers), cleaners that contain citrus products, or abrasive cleaning pads on barbecue or cart surfaces.

Slide-out grease tray — Remove excess grease, wash with warm soapy water, then rinse.

⚠ CAUTION: Do not line the slide-out grease tray with aluminum foil.

Flavorizer® bars and cooking grates — Clean with a suitable stainless steel bristle brush. As needed, remove from grill and wash with warm soapy water, then rinse with water.

For availability of replacement cooking grates and Flavorizer® bars, contact the Customer Service Representative in your area using the contact information on our website. Log onto www.weber.com®.

Catch pan — Disposable foil trays are available, or you can line the catch pan with aluminum foil. To clean the catch pan, wash with warm soapy water, then rinse.

Thermometer — Wipe with warm soapy water; clean with plastic scrub ball.

Cookbox — Brush any debris off of burner tubes. DO NOT ENLARGE BURNER PORTS (OPENINGS). Wash inside of cookbox with warm soapy water and a water rinse.

Inside lid — While lid is warm, wipe inside with paper towel to prevent grease build-up. Flaking built-up grease resembles paint flakes.

Stainless steel surfaces — Wash with a soft cloth and a soap and water solution. Be careful to scrub with the grain direction of the stainless steel.

Do not use cleaners that contain acid, mineral spirits, or xylene. Rinse well after cleaning.

Preserve your stainless steel — Your grill or its cabinet, lid, and control panel may be made from stainless steel. Keeping the stainless steel looking its best is a simple matter. Clean it with soap and water, rinse with clear water, and wipe dry. For stubborn particles, a non-metallic brush can be used.

⚠ IMPORTANT: Do not use a wire brush or abrasive cleaners on the stainless steel surfaces of your grill as this will cause scratches.

⚠ IMPORTANT: When cleaning surfaces be sure to rub/wipe in the direction of the grain to preserve the look of your stainless steel. ◆

WEBER® SPIDER/INSECT SCREENS

Your Weber® gas barbecue, as well as any outdoor gas appliance, is a target for spiders and other insects. They can nest in the venturi section **(1)** of the burner tubes. This blocks the normal gas flow, and can cause the gas to flow back out of the combustion air opening. This could result in a fire in and around the combustion air openings, under the control panel, causing serious damage to your barbecue.

The burner tube combustion air opening is fitted with a stainless steel screen **(2)** to prevent spiders and other insects access to the burner tubes through the combustion air openings.

We recommend that you inspect the spider/insect screens at least once a year. (Refer to "ANNUAL MAINTENANCE.") Also inspect and clean the the spider/insect screens if any of the following symptoms should ever occur:

A) Gas is smelled in conjunction with burner flames that appear yellow and lazy.
B) Barbecue does not reach temperature.
C) Barbecue heats unevenly.
D) One or more of the burners do not ignite.

⚠ DANGER

Failure to correct the above mentioned symptoms may result in a fire, which can cause serious bodily injury or death, and cause damage to property. ◆

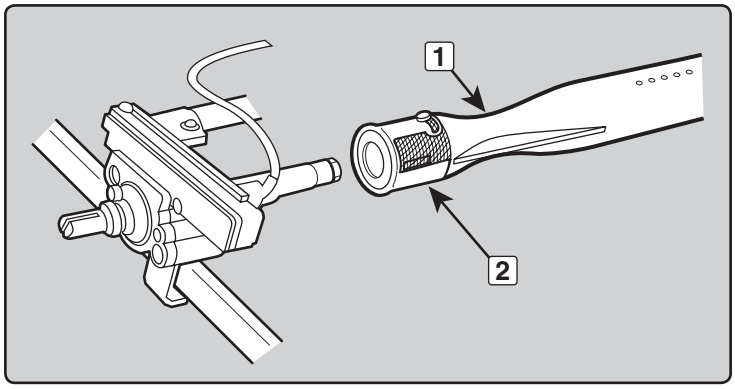

BURNER TUBE CLEANING

A) Turn off the gas supply.
B) Remove the manifold. (Refer to "REPLACING MAIN BURNERS.")
C) Look inside each burner with a flashlight.
D) Clean the inside of the burners with a wire (a straightened-out coat hanger will also work). Check and clean the air shutter opening at the ends of the burners. Check and clean the valve orifices at the base of the valves. Use a steel bristle brush to clean outside of burners. This is to make sure all the burner ports are fully open.

⚠ CAUTION: Do not enlarge the burner ports when cleaning. ◆

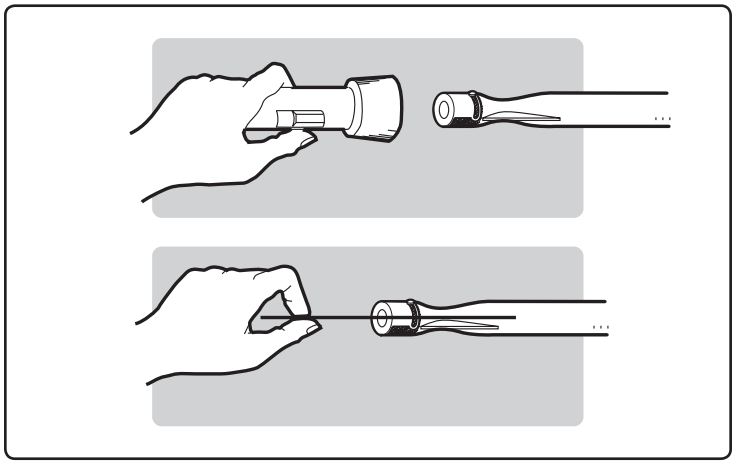

REPLACING MAIN BURNERS

A) Your Summit® gas grill must be off and cool.
B) Turn gas off at source.
C) Disconnect gas supply.
D) Remove cooking grates.
E) Remove Flavorizer® bars.
F) Remove smoker box (if included in your model).

Remove Control Panel

Parts required: Phillips screwdriver and a towel.

A) Remove the burner control knobs **(1)**.
B) Open both doors and place a towel on top of the doors.
This will protect the control panel and tops of the doors from getting scratched on the next step.
C) Remove the screws from the underside of the control panel with a Phillips screwdriver **(2)**.
D) Tilt the conrol panel forward and lift up and away from the grill **(3)** (For Summit® models with LED features: Be careful not to break or disconnect the wires for the control panel LED's).
E) Place the control panel on the towel covering the door assemblies **(4)**.

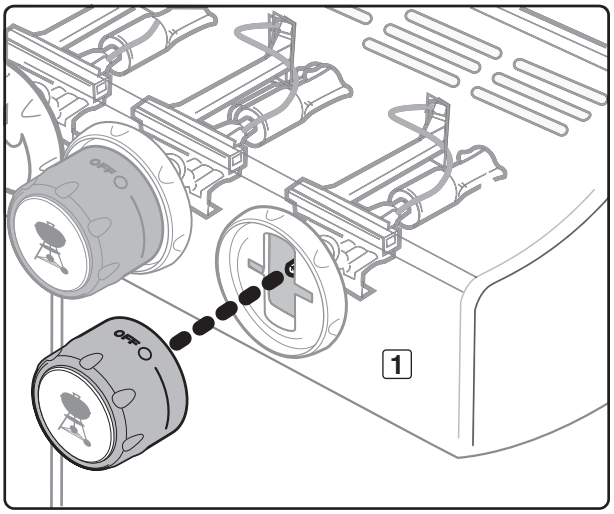

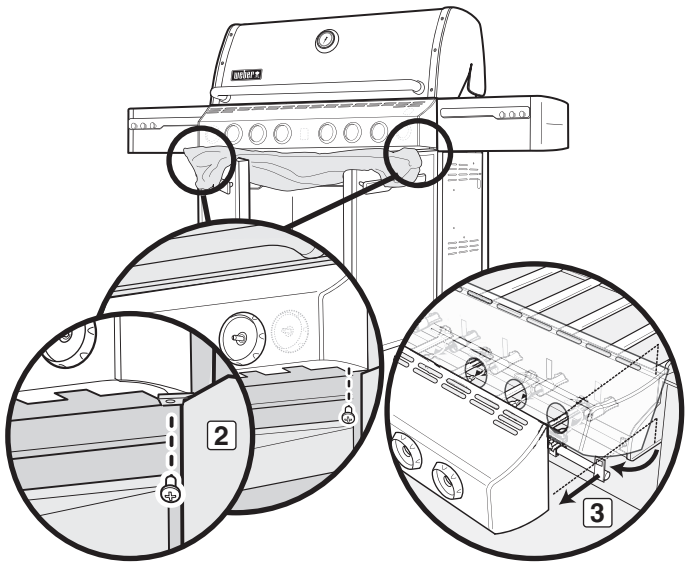

The grill illustrated may have slight differences than the model purchased.

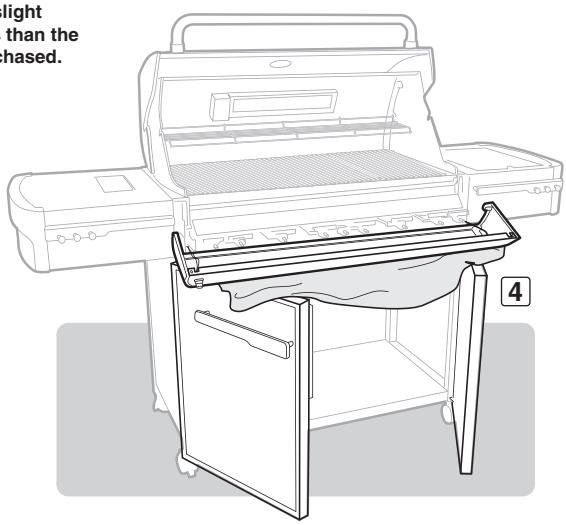

F) Remove the two screws that secure the manifold to the cookbox. Pull manifold assembly out from the manifold frame **(5)**.
G) Pull the selected burner(s) tube(s) from manifold frame and replace with a new burner tube **(6)**.

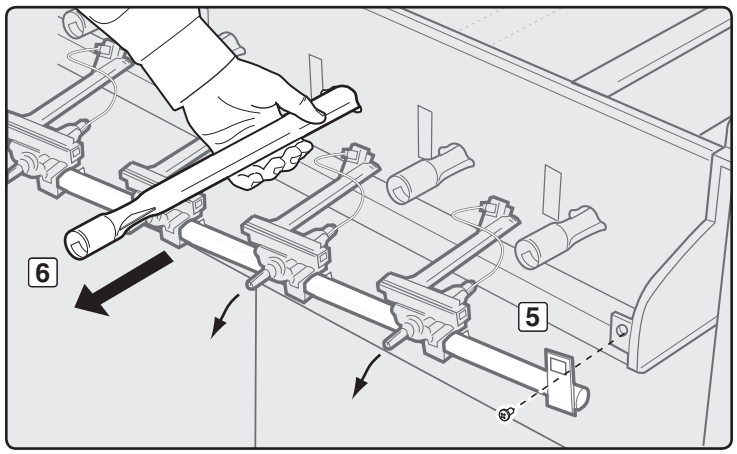

H) To reinstall the manifold assembly, reverse steps A through G.

⚠ **CAUTION: The burner openings (7) must be positioned properly over the valve orifices (8). Make sure the opposite end of the burner tubes (9) properly align into the slots on the backside of the cookbox. Check proper assembly before fastening manifold in place.**

⚠ **WARNING: After reinstalling the gas lines, they should be leak checked with a soap and water solution before using the grill. (See "CHECK FOR GAS LEAKS")** ◆

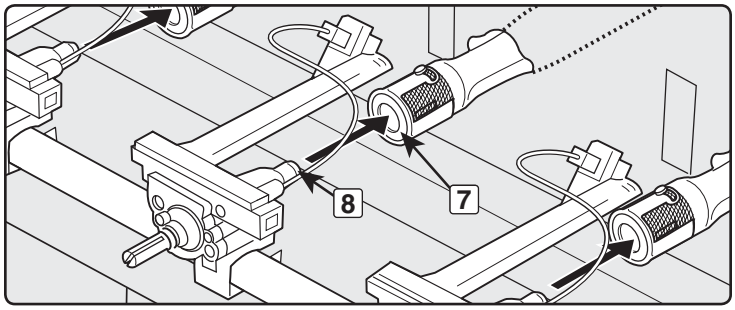

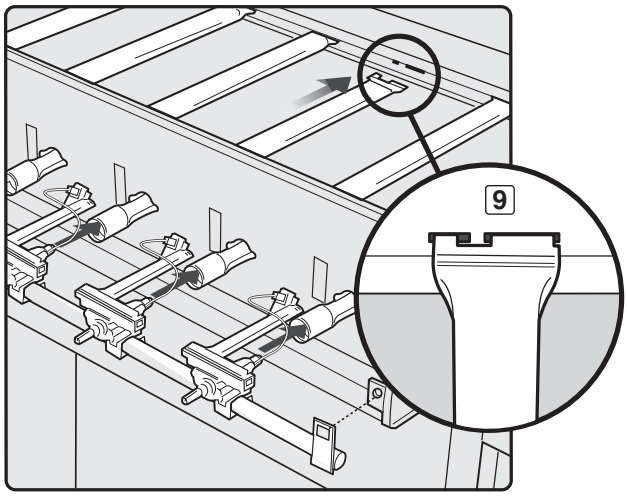

SIDE BURNER MAINTENANCE

⚠ **WARNING: All gas controls and supply valves should be in the OFF position.**

Make sure black wire is connected between the igniter and electrode.

Make sure white wire is connected between the igniter and grounding clip.

Spark should be a white/blue color, not yellow.

A) Igniter wire **(1)**
B) Ground wire **(2)**
C) Burner **(3)** ◆

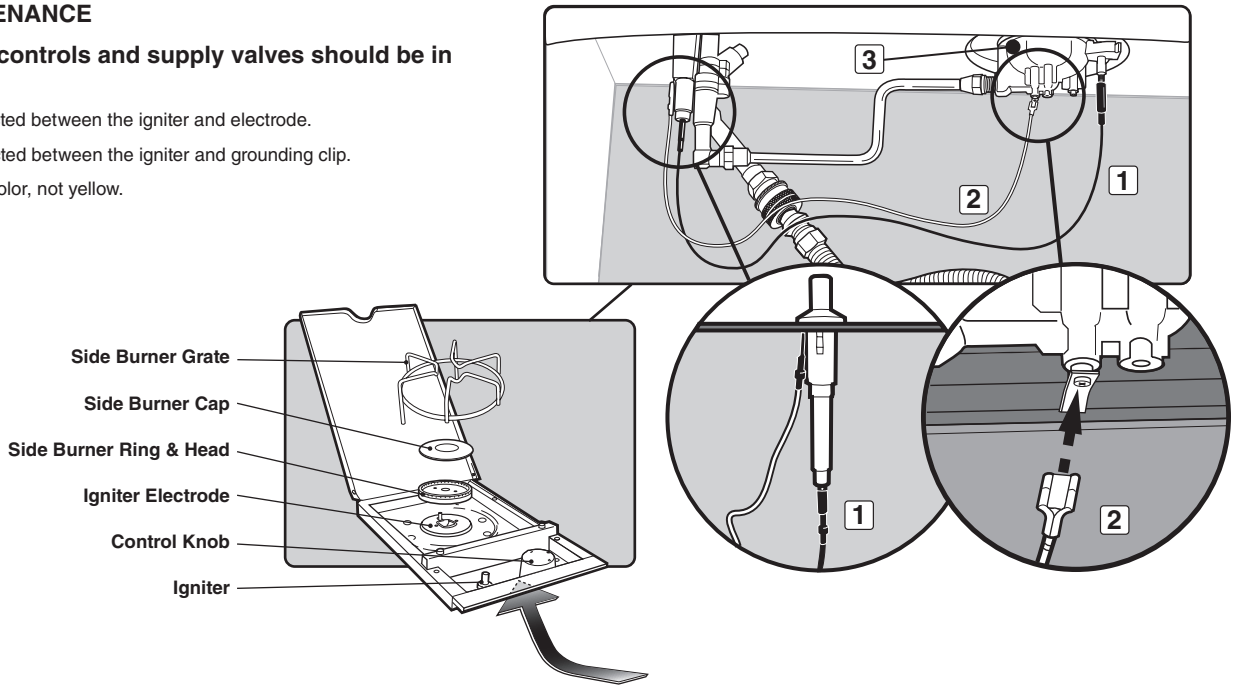

ANNUAL MAINTENANCE

Inspection and Cleaning of the Spider/Insect Screens

To inspect the spider/insect screens, remove the control panel. If there is dust or dirt on the screens, remove the burners to clean the screens.

Brush the spider/insect screens lightly with a soft bristle brush (i.e., an old toothbrush).

⚠ CAUTION: Do not clean the spider/insect screens with hard or sharp tools. Do not dislodge the spider/insect screens or enlarge the screen openings.

Lightly tap the burner to get debris and dirt out of the burner tube. Once the spider/insect screens and burners are clean, replace the burners.

If a spider/insect screen becomes damaged or cannot be cleaned, please contact the Customer Service Representative in your area using the contact information on our web site. Log onto www.weber.com®.

Burner Flame Pattern

The Weber® gas barbecue burners have been factory set for the correct air and gas mixture. The correct flame pattern is shown in illustration and described below:

A) Burner tube **(1)**
B) Tips occasionally flicker yellow **(2)**
C) Light blue **(3)**
D) Dark blue **(4)**
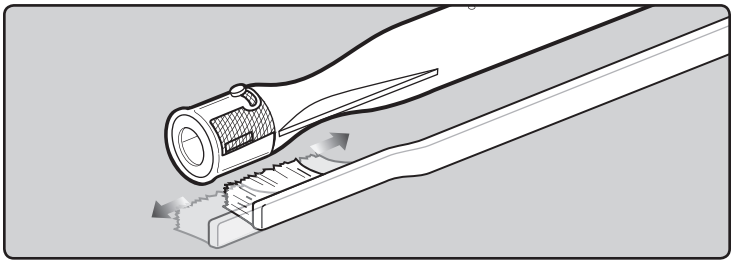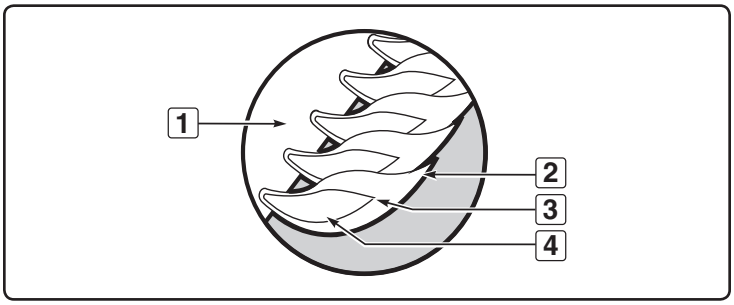
If the flames do not appear to be uniform throughout the burner tube, follow the burner cleaning procedures. ◆