QUOIZEL
6 CORPORATE PARKWAY
GOOSE CREEK, SC. 29445
www. quoizel. com

Assembly Instruction Sheet #IS-NGT8602BN
For Styles NGT8602BN

Tools Required: Flathead screwdriver, Phillips screwdriver, pliers, wire cutters, wire strippers, electrical tape, safety glasses.
Bulb Recommended: (2) Medium Base 100W Maximum, Alternate bulb (2) 23W CFL
Estimated Assembly Time: 20-30 minutes
Preparation: Identify and inspect all parts before beginning installation. Check package content list and diagrams below to be sure all parts are present. If any parts are missing or damaged, do not attempt to assemble, install, or operate the fixture. Contact customer service for replacement parts.

⚠ Warnings and Cautions

Turn off electricity at circuit breaker or main fuse box before installation. Consult a licensed electrician if in doubt.

These instructions are provided for your safety. It is very important you read them completely before installing the fixture. We strongly recommend that a licensed, professional electrician perform the installation.

Disconnect fixture from power source before replacing bulbs. Make sure bulbs are given sufficient time to cool before removal. Do not subject glass parts to any shock while in operation or shattering may result.

Package Contents

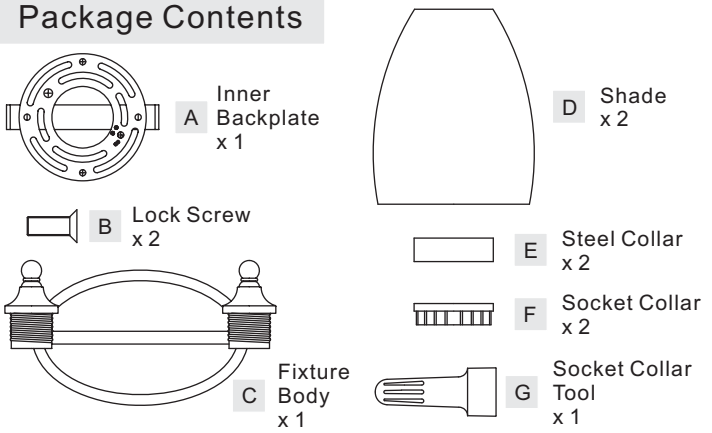

STEP 1 – Install Inner Backplate and Fixture Body

A. Pass the supply wires through Inner Backplate (A). Attach Inner Backplate (A) to Outlet Box with the head of Green Ground Screw facing you. Secure it with Outlet Box Screws (not included). Tighten until snug.
B. Race all supply wires through the Inner Backplate (A) as shown. Refer to Step 2 for wiring connections. Refer to Step 2 for wiring connections.
C. Attach Fixture Body (C) over Inner Backplate (A) and secure with Lock Screws (B). Tighten until snug with screwdrivers.

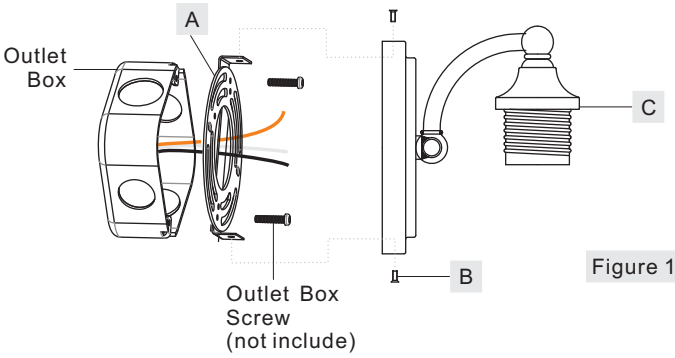

Figure 1

STEP 2 - Wire Connections

A. Use standard wire connectors (not included) to make all wire connections. (Connectors are not included with fixture.) Twist connectors until wires are tightly joined together. Wrap each connection with approved electrical tape and carefully stuff all the connected wires into the outlet box.

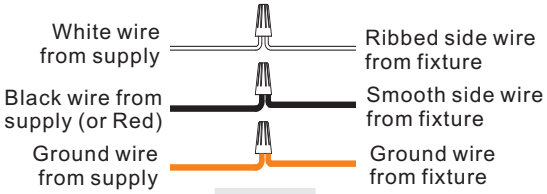

Figure 2

STEP 3 - Install Shades

A. Place Shade (D) and Steel Collar (E) over Socket and secure by using Socket Collar Tool (G) threading the Socket Collar (F) onto the Socket, tighten until sung.
B. This fixture uses standard bulb with medium screw base. Maximum 100 watts.
C. Insert bulb and screw snugly into place.

Your fixture is now assembled and ready to use. Enjoy!

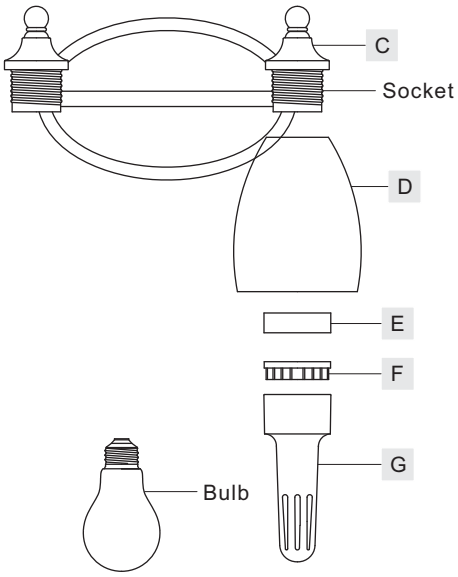

Thank you for purchasing a Quoizel product.
Need assistance with parts or assembly? Call Quoizel customer service at 1-631-273-2700
or visit us on-line at www.quoizel.com

© 2014 Quoizel Inc.

July 2014

NGT8602BN
FINISH: BRUSHED NICKEL

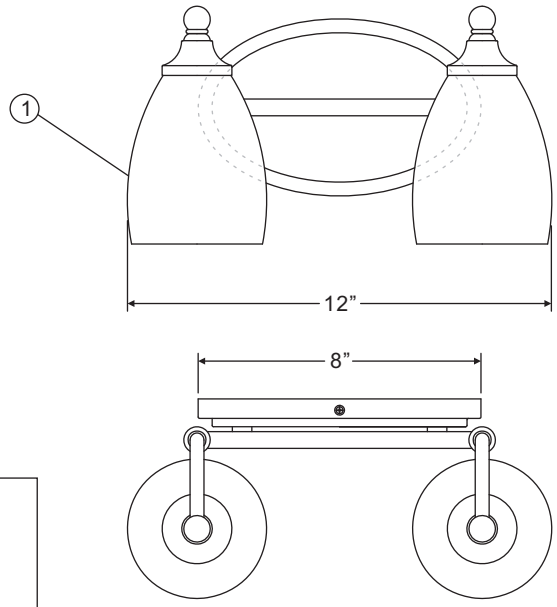

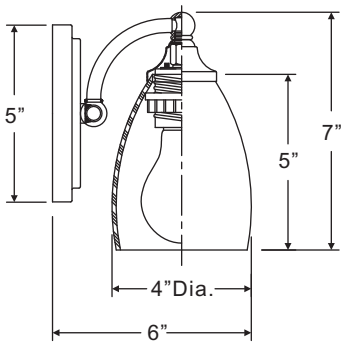

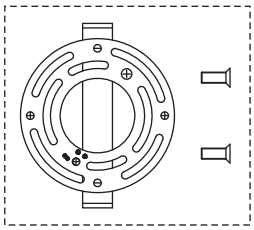

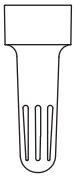

(2) 100W Medium Base Bulbs (Not Supplied)

NOTE: ALL DIMENSIONS ARE ROUNDED UP TO THE NEAREST 1/2″

NO.	PART NUMBER	REPLACEMENT PART DESCRIPTION	REQ.
1	G3662SH	GLASS SHADE OPAL ETCHED	2

Thank you for purchasing a Quoizel product.
Need assistance with parts or assembly? Call Quoizel customer service at 1-631-273-2700
or visit us on-line at www.quoizel.com

© 2014 Quoizel Inc.

July 2014