QUOIZEL
6 CORPORATE PARKWAY
GOOSE CREEK, SC. 29445
www. quoizel. com

Assembly Instruction Sheet #IS-PRL8601PK
For Styles PRL8601PK

Please go to **www.quoizel.com** for product cleaning tips. Go to the **Care + Maintenance** selection.
Tools Required: Flathead screwdriver, Phillips screwdriver, pliers, wire cutters, wire strippers, electrical tape, safety glasses.
Light Source: (1) A19 Medium Base 100W Maximum, Alternate bulb (1) 23W CFL.
Estimated Assembly Time: 20-30 minutes
Preparation: Identify and inspect all parts before beginning installation. Check package content list and diagrams below to be sure all parts are present. If any parts are missing or damaged, do not attempt to assemble, install, or operate the fixture. Contact customer service for replacement parts.

⚠ Warnings and Cautions

Turn off electricity at circuit breaker or main fuse box before installation. Consult a licensed electrician if in doubt.

These instructions are provided for your safety. It is very important you read them completely before installing the fixture. We strongly recommend that a licensed, professional electrician perform the installation.

Disconnect fixture from power source before replacing bulbs. Make sure bulbs are given sufficient time to cool before removal. Do not subject glass parts to any shock while in operation or shattering may result.

Package Contents

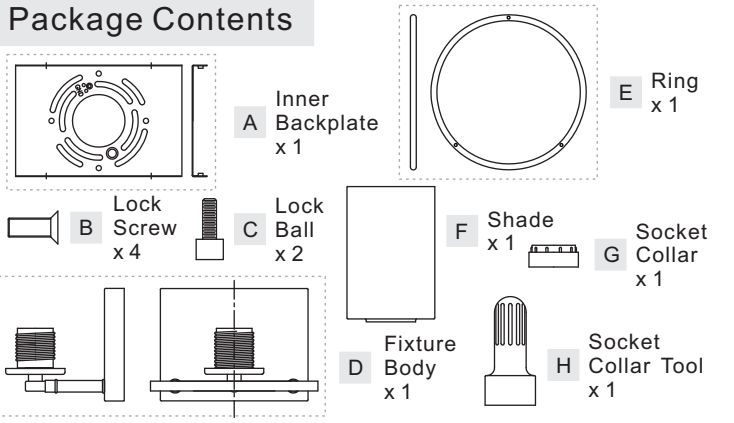

STEP 1 – Install Inner Backplate and Fixture Body

A. Pass the supply wires through Inner Backplate (A). Attach Inner Backplate (A) to Outlet Box with the head of Green Ground Screw facing you. Secure it with Outlet Box Screws (not included). Tighten until snug.
B. Race all supply wires through the Inner Backplate (A) as shown. Refer to Step 2 for wiring connections.
C. Attach Fixture Body (D) over Inner Backplate (A) and secure with Lock Screws (B). Tighten until snug with screwdrivers.

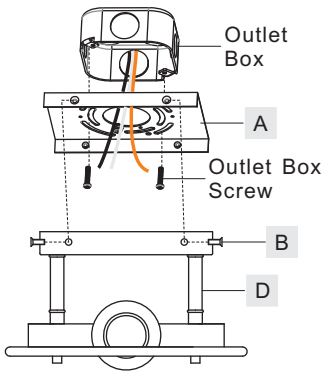

Figure 1

STEP 2 - Wire Connections

A. Use standard wire connectors (not included) to make all wire connections. (Connectors are not included with fixture.) Twist connectors until wires are tightly joined together. Wrap each connection with approved electrical tape and carefully stuff all the connected wires between Inner Backplate (A) and Fixture Body (D).

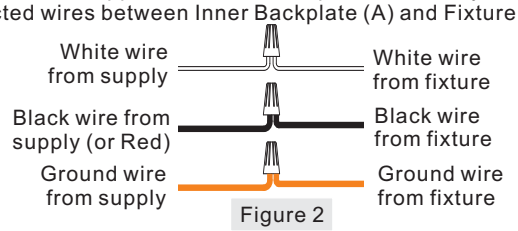

Figure 2

STEP 3 - Install Shades

A. Place the Shade (F) over the Socket as shown. By using the Socket Collar Tool (H), thread the Socket Collar (G) onto the Socket. Hand tighten until snug to secure the Shade (F).
B. Place the Plug on the Ring (E) against the wall. Line up the Holes on the Ring (E) and the mounting holes on the Fixture Body (D), secure by threading Lock Ball (C) onto the Fixture Body (D), hand tighten until sung.

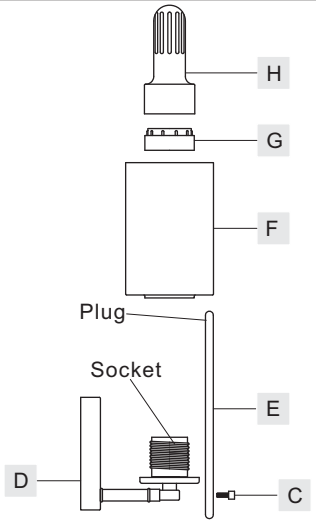

Figure 3

STEP 4 - Install Bulb

A. This fixture uses standard bulb with medium base. Maximum 100 watts.
B. Insert bulb and screw snugly into place.

Your fixture is now assembled and ready to use. Enjoy!

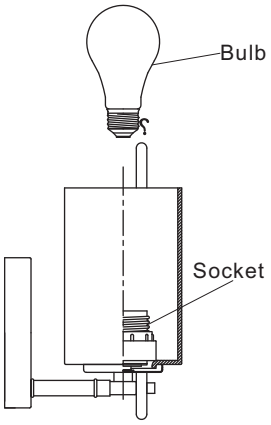

Figure 4

Thank you for purchasing a Quoizel product.
Need assistance with parts or assembly? Call Quoizel customer service at 1-631-273-2700
or visit us on-line at www.quoizel.com

© 2015 Quoizel Inc.
February 2015

PRL8601PK

FINISH: POLISHED NICKEL

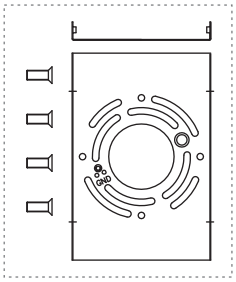

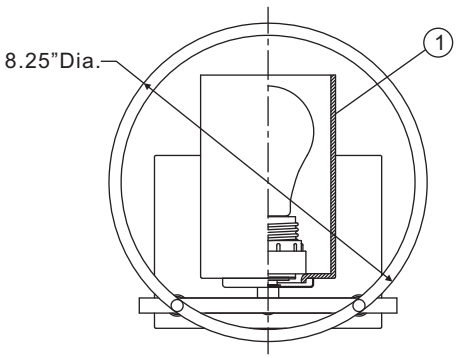

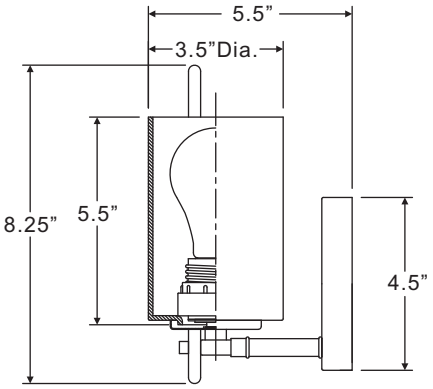

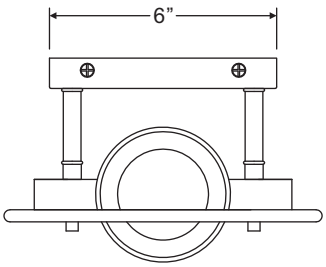

(1) 100W Medium Base Bulbs (Not Supplied)

NOTE: ALL DIMENSIONS ARE ROUNDED UP TO THE NEAREST 1/2″

NO.	PART NUMBER	REPLACEMENT PART DESCRIPTION	REQ.
1	G4006SH	SHADE	1

Thank you for purchasing a Quoizel product.
Need assistance with parts or assembly? Call Quoizel customer service at 1-631-273-2700
or visit us on-line at www.quoizel.com

© 2015 Quoizel Inc.

February 2015