QUOIZEL
6 CORPORATE PARKWAY
GOOSE CREEK, SC. 29445
www. quoizel. com

Assembly Instruction Sheet #IS-CATL8411PN
For Style CATL8411PN

Please go to **www.quoizel.com** for product cleaning tips. Go to the **Care + Maintenance** selection.
Tools Required: Flathead screwdriver, Phillips screwdriver, pliers, wire cutters, wire strippers, electrical tape, safety glasses.
Light Source: LED 16W
Estimated Assembly Time: 20-30 minutes
Preparation: Identify and inspect all parts before beginning installation. Check package content list and diagrams below to be sure all parts are present. If any parts are missing or damaged, do not attempt to assemble, install, or operate the fixture. Contact customer service for replacement parts.
Fixture can only be mounted in the direction indicated on page 2.

⚠ Warnings and Cautions

Turn off electricity at circuit breaker or main fuse box before installation. Consult a licensed electrician if in doubt.

These instructions are provided for your safety. It is very important you read them completely before installing the fixture. We strongly recommend that a licensed, professional electrician perform the installation.

Disconnect fixture from power source before replacing bulbs. Make sure bulbs are given sufficient time to cool before removal. Do not subject glass parts to any shock while in operation or shattering may result.

Package Contents

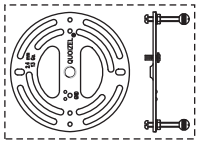

A Crossbar Assembly x 1

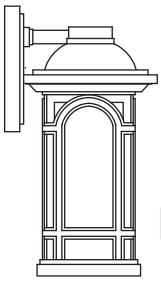

B Fixture Body x 1

STEP 1 – Install Crossbar Assembly

A. Pass the supply wires through the Crossbar Assembly (A). Attach the Crossbar Assembly (A) to the Outlet Box with the head of the Green Ground Screw facing you. Secure it with Outlet Box Screws (not included). Tighten until snug.

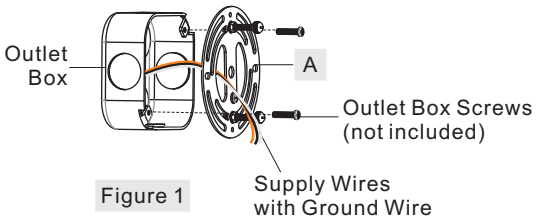

Figure 1

STEP 2 – Fit Backplate to Crossbar Assembly

A. Remove mounting balls from the Crossbar Assembly (A). Fit the backplate on Fixture Body (B) to the Crossbar Assembly (A) and secure with mounting balls. Note: The backplate on Fixture Body (B) should be snug against the wall and the mounting balls. If not, adjust the length of the mounting screw on the Crossbar Assembly (A) by unscrewing the preassembled hex nut and lock washer and then screwing the mounting screws in or out of the crossbar until the correct length is achieved. Once the backplate on Fixture Body (B) is secure, remove the mounting ball and Fixture Body (B) and proceed to Step 3.

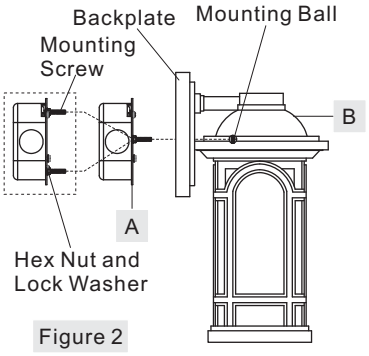

Figure 2

STEP 3 - Wire Connections

A. Use standard wire connectors (not included) to make all wire connections. (Connectors are not included with fixture.) Twist connectors until wires are tightly joined together. Wrap each connection with approved electrical tape and carefully stuff all the connected wires into the Outlet Box.

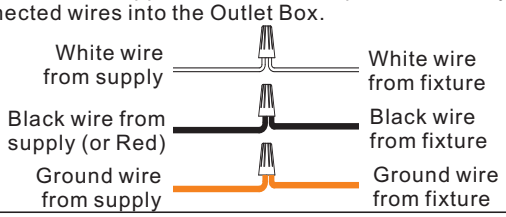

Figure 3

STEP 4 – Install Fixture Body

A. Carefully tuck all wires into the outlet box and position the backplate of fixture body (B) over the outlet box. Align the holes in the backplate with the mounting screws. Place caulk (not supplied) into the previously removed mounting balls and then attach fixture body (B) using the mounting balls. Hand tighten until snug.

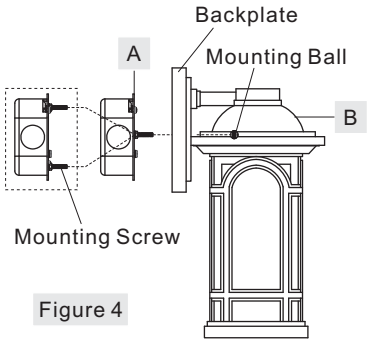

Figure 4

STEP 5 – Apply Silicone Sealer

A. Make sure exterior wall surface and fixture backplate are free of dirt before applying caulk. Using exterior grade caulk, caulk over top of backplate and down other side. Do not caulk bottom of fixture backplate to ensure proper moisture drainage.

Your fixture is now assembled and ready to use. Enjoy!

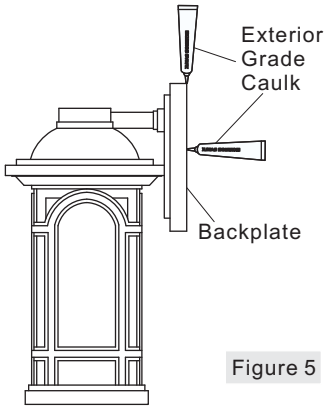

Figure 5

Thank you for purchasing a Quoizel product.
Need assistance with parts or assembly? Call Quoizel customer service at 1-631-273-2700
or visit us on-line at www.quoizel.com

© 2015 Quoizel Inc.

August 2015

HOW TO REPLACE GLASS PANELS

A. Unlock Allen Screws on the Fixture Hood. Separate Quick Connector and then remove Cage with Glass Panels from the fixture.
B. Unscrew Screws from the Cage and remove LED Module and Heat Sink.
C. Unscrew Screws from the Cage and remove Glass Holders. Replace Glass Panels from the Cage and then re-install Glass Holders to secure them. Secure with removed Screws.
D. Re-install LED Module and Heat Sink onto the top edge of the Cage. Secure with Screws. Connect Quick Connectors. Attach Cage with Glass Panels back onto the Fixture Hood and secure with Allen Screws.

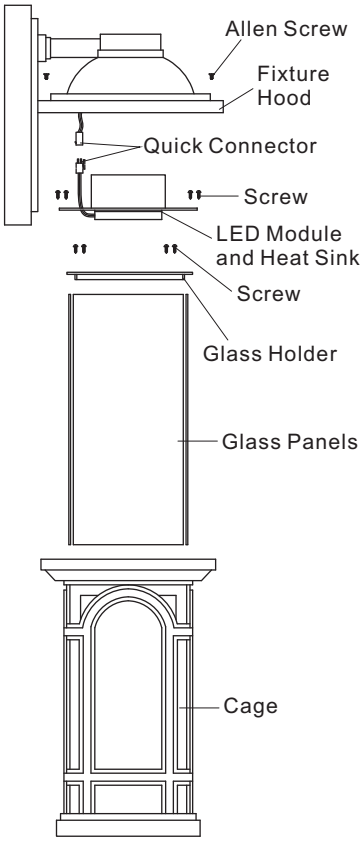

Figure 6

HOW TO REPLACE LED MODULE

A. Unlock Allen Screws on the Fixture Hood. Separate Quick Connector and then remove Cage with Glass Panels from the fixture.
B. Unscrew Screws from the Cage and remove LED Module and Heat Sink.
C. Unscrew Lock Screws on the LED Module and remove LED Module from the Board. Attach the replacement LED Module onto the Board. Pass Lock Screws through the replacement LED Module, the Board and the Heat Sink. Secure by threading Hex Nuts onto Lock Screws. Hand tighten until snug. Pass the Quick Connector from the LED Module through the hole on the Heat Sink.
D. Re-install LED Module and Heat Sink onto the top edge of the Cage. Secure with Screws. Connect Quick Connectors. Attach Cage with Glass Panels back onto the Fixture Hood and secure with Allen Screws.

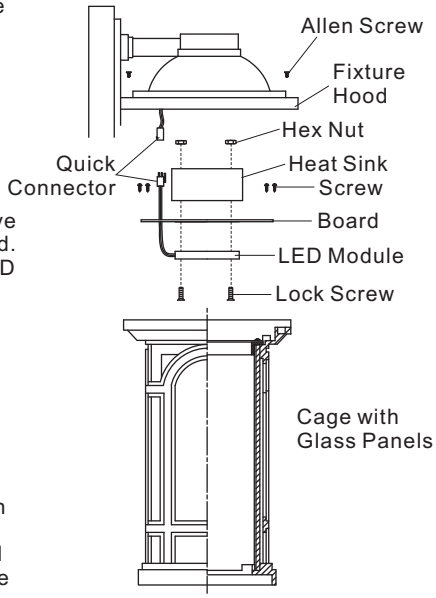

Figure 7

CATL8411PN

FINISH: PALLADIAN BRONZE

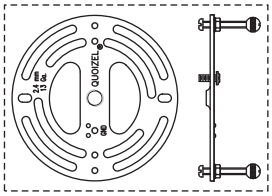

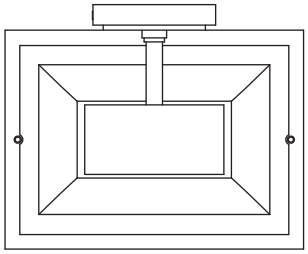

Fixture can only be mounted in the direction indicated

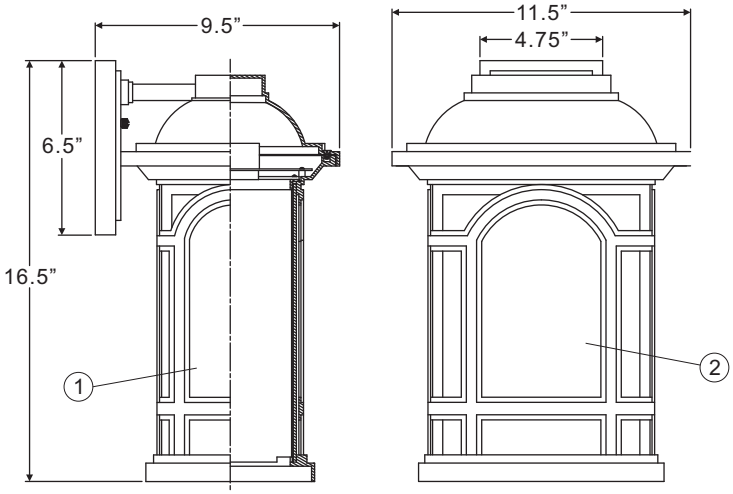

NO.	PART NUMBER	REPLACEMENT PART	REQ.
1	G12217PA	SIDE GLASS PANEL	2
2	G12218PA	FRONT/BACK GLASS PANEL	2

NOTE: ALL DIMENSIONS ARE ROUNDED UP TO THE NEAREST 1/4″

Thank you for purchasing a Quoizel product.
Need assistance with parts or assembly? Call Quoizel customer service at 1-631-273-2700
or visit us on-line at www.quoizel.com

© 2015 Quoizel Inc.

August 2015