QUOIZEL
6 CORPORATE PARKWAY
GOOSE CREEK, SC. 29445
www. quoizel. com

Assembly Instruction Sheet #IS-Q2605FOI
For Style Q2605FOI

Please go to **www.quoizel.com** for product cleaning tips. Go to the **Care + Maintenance** selection.
Tools Required: None.
Light Source: (3) A19 Medium Base 60W bulb Maximum, Alternate bulb (3) 13W CFL Maximum.
Estimated Assembly Time: 15-20 minutes
Preparation: Identify and inspect all parts before beginning installation. Check package content list and diagrams below to be sure all parts are present. If any parts are missing or damaged, do not attempt to assemble, install, or operate the fixture. Contact customer service for replacement parts.

⚠ Warnings and Cautions

Turn off electricity at circuit breaker or main fuse box before installation. Consult a licensed electrician if in doubt.

These instructions are provided for your safety. It is very important you read them completely before installing the fixture. We strongly recommend that a licensed, professional electrician perform the installation.

Disconnect fixture from power source before replacing bulbs. Make sure bulbs are given sufficient time to cool before removal. Do not subject glass parts to any shock while in operation or shattering may result.

A. Insert the nipple on the Tube into the Base. Place Lock Washer over the nipple, secure by using Wrench thread the Hex Nut onto the nipple, hand tighten until snug.
B. Threading Tube with Switch onto the Tube, hand tighten until snug.
C. Connect the Quick Connectors.
D. Insert Arm Assembly into the Tube. Line up the hole on the Tube and the mounting hole on the Socket Assembly, secure by threading Lock Screw into the mounting hole. Hand tighten until sung.
E. Attach Socket Assembly to the fixture. By using Allen Wrench thread Allen Screw into the mounting hole on the Socket Assembly, tighten until snug.
F. This fixture uses standard bulb with medium base . Maximum 60 watts. Insert bulb and screw snugly into place.

Your fixture is now assembled and ready to use. Enjoy!

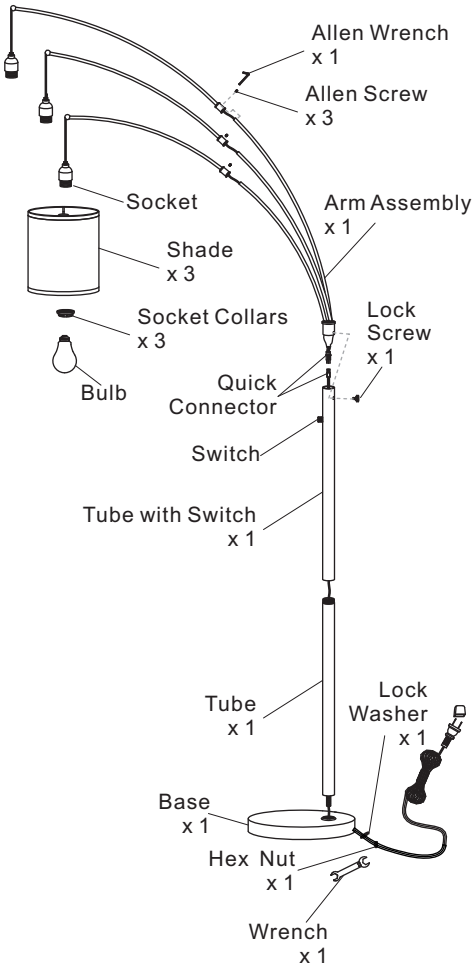

Q2605FOI
FINISH: OIL RUBBED BRONZE

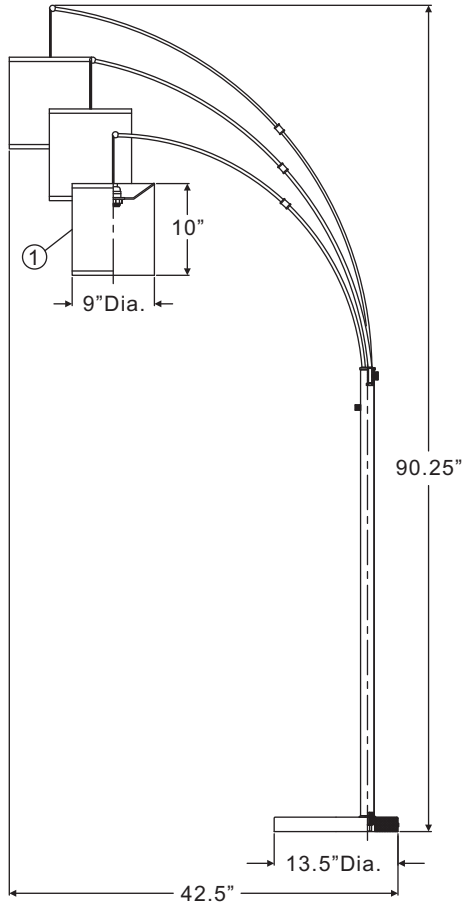

NOTE:
ALL DIMENSIONS ARE ROUNDED UP TO THE NEAREST 1/4″

(3) 60W Medium Base Bulbs (Not Supplied)

NO.	PART NUMBER	REPLACEMENT PART	REQ.
1	S12746FA	SHADE	3
2			

Thank you for purchasing a Quoizel product.
Need assistance with parts or assembly? Call Quoizel customer service at 1-631-273-2700
or visit us on-line at www.quoizel.com

© 2016 Quoizel Inc.

January 2016