HZ492400TX
AG-DESK TOP
Assembly Instructions

For assistance with assembly, contact：

Southern Enterprises Inc.
Customer Service 1-800-633-5096
service@seidal.com
www.seidal.com

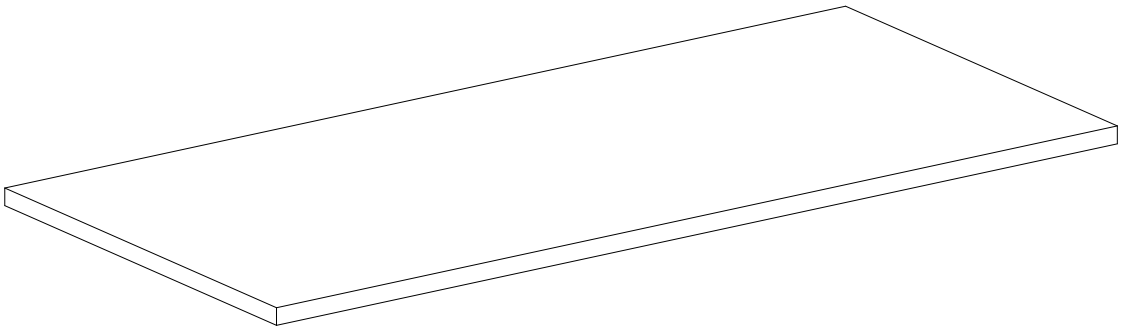

AG-DESK TOP

Parts List

Please review all parts and hardware before disposing of any packaging.
Call Customer Service if missing hardware. Do not return to store/retailer.
Using a screw that is too long will cause damage.
Before beginning assembly, separate each type of screw. Carefully study the Screw diagrams below. You may receive extra hardware with your unit.

A Quantity of 1

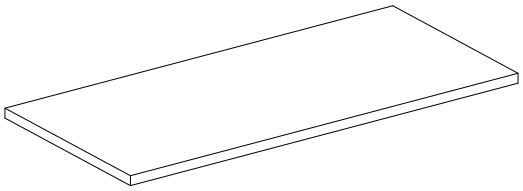

Top panel

B Quantity of 1

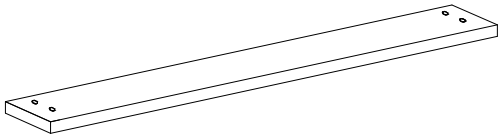

Support rail

1 Quantity of 4

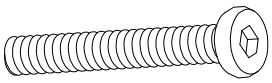

bolt

2 Quantity of 4

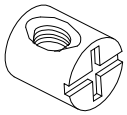

nut

3 Quantity of 1

Allen wrench

Care and Cleaning Instructions:
Before using, wipe with a clean, dry cloth. Periodically apply furniture wax to renew the finish. Avoid rubbing or scratching the surface with rough or abrasive objects.
For replacement parts or questions, please

For replacement parts or questions, please Call Customer Service at 1-800-633-5096 Do not return product to store, please call Manufacturer for assistance, questions or Parts.

Assembly Tool Required No.2 Phillips Screwdriver (Not Included)

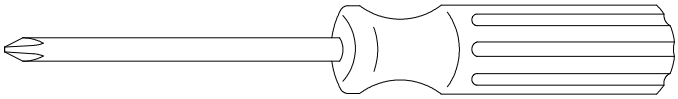

AG-DESK TOP

Assembly Instructions

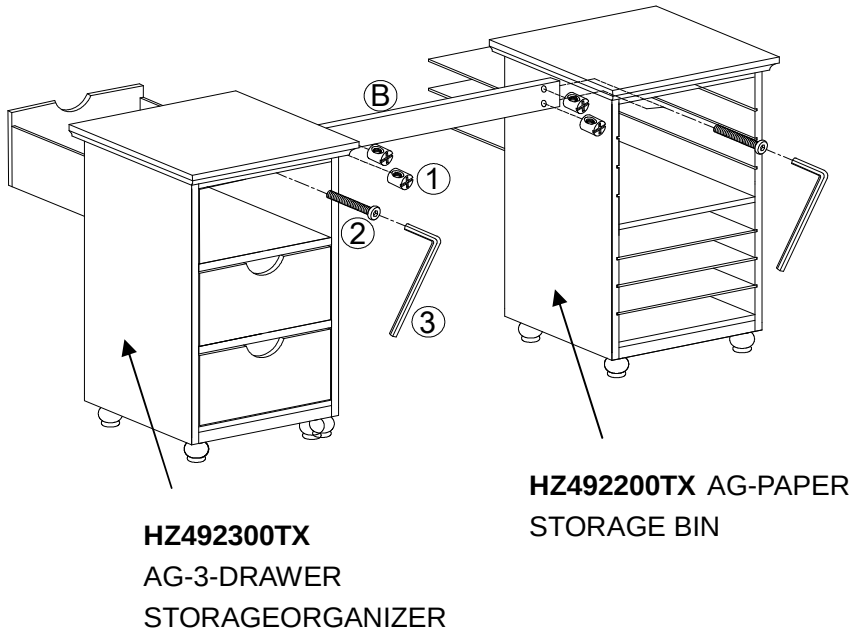

Figure 1

Unpack and lay parts on clean, padded surface like carpet or blanket. Check that you have all parts indicated on the front page

Insert nut (**1**) into predrilled holes on support rail (**B**).
Screw bolt (**2**) through holes on side panel of **HZ492300TX** AG-3-DRAWER STORAGE ORGANIZER & **HZ492200TX** AG-PAPER STORAGE BIN's side panel . Attach AG-3-DRAWER STORAGE ORGANIZER (**HZ492300TX**)& AG-PAPER STORAGE BIN (**HZ492200TX**) to support rail (**B**) by nut (**1**) & bolt (**2**), Tighten bolt (**2**) by Allen wrench (**3**).

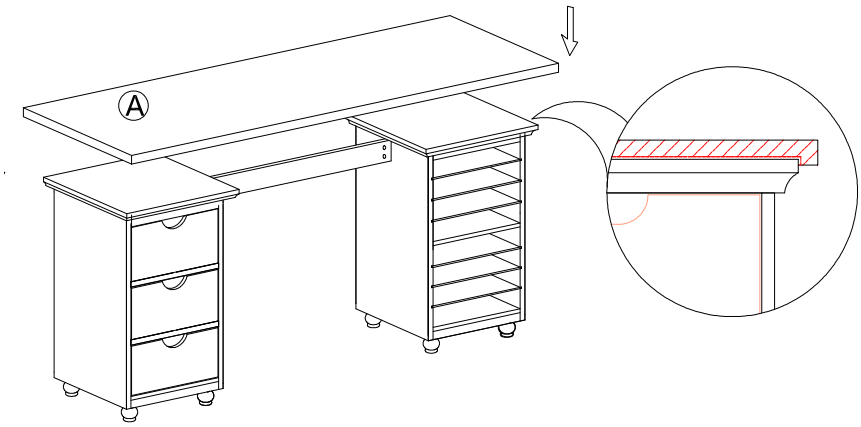

put top panel **(A)** to pre-assembly unit on figure 1 as shown

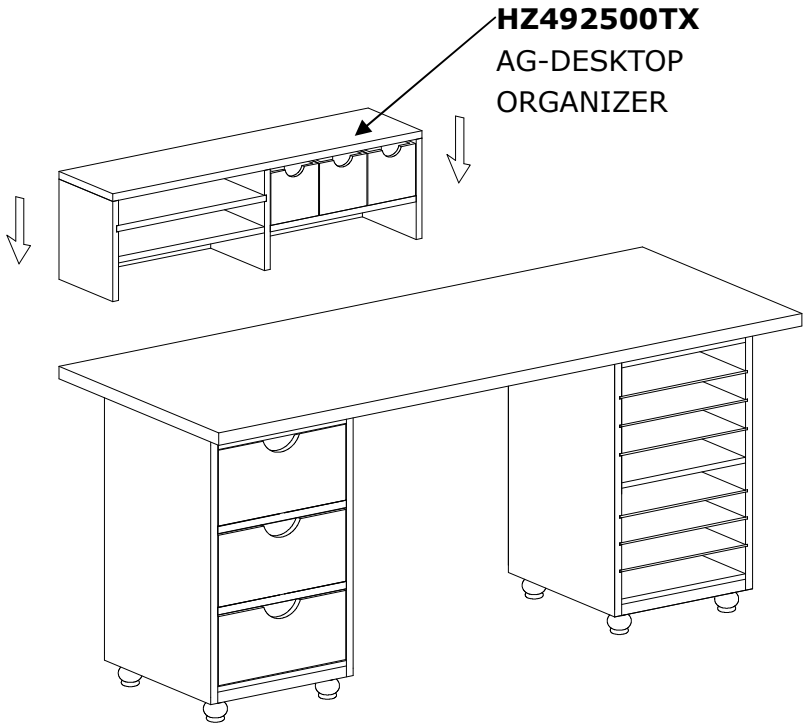

Figure 3

Put **HZ492500TX** AG-DESKTOP ORGANIZER to top panel as shown.

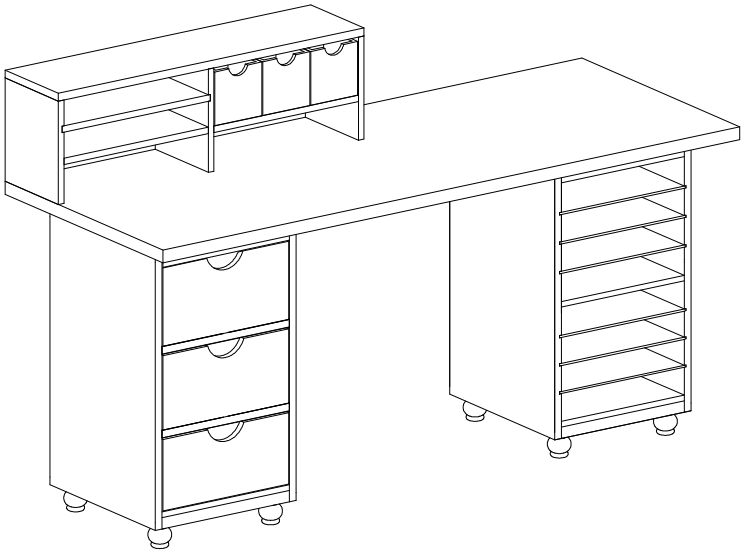

Figure 4

Now your whole set Anna Griffin product are ready to use.

Parts Replacement Form

Customer Information

Name _____

Address _____

City/State/Zip Code _____

Phone Number _____

Please indicate where you purchased this item: Store/Website/Catalog

_____

Please indicate color/size/style number:

_____

Style No	Parts Letter	Parts Description	Quantity Needed

Please immediately examine this product carefully. Any request for missing parts or damage replacement must be received within 90 days of your receipt of the product. Replacement, if available, will be honored within this time frame. Parts will not be available for items arriving fully assembled. We do not recommend modifying product(s) and we are not responsible for any damages due to product modification(s). If damages or missing parts are not reported within 90 days of your receipt, we are under no obligation to provide parts or replacement merchandise. Please contact Southern Enterprises at 800-633-5096 or in Dallas 972-869-0111/ 9am – 4pm Mon-Fri Central time if you have product issues or email us at service@seidal.com. Please ask for customer service representative for issues involving damages or replacement parts. Please ask for technical assistance representative for any issues with product and assembly/construction.

Please contact the retailer that you purchased from for returns.

Customer Service 1-800-633-5096
service@seidal.com
Southern Enterprises, Inc.
600 Freeport Parkway, Suite 200
Coppell, Texas 75019