88 5542 80
Bermuda Chair

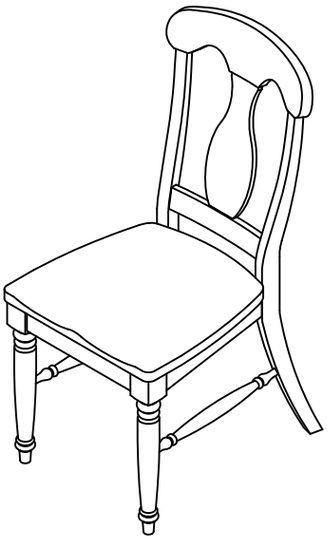

IMPORTANT NOTE

Carefully remove all the parts from the carton and put them individually on a soft cloth to prevent scratches or other damage occuring to the wood parts.

We have taken great care in the design of this product and request that you carefully and strictly follow our assembly instructions to ensure a completed product as it was designed.

Home Styles

Part List

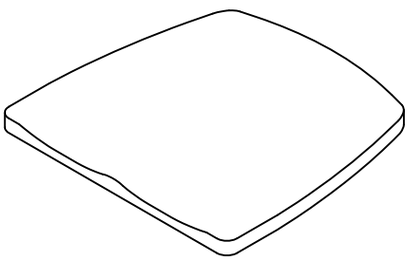

B.
Seat
1 pc.

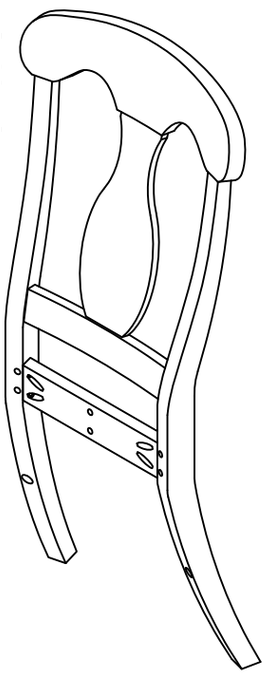

A.
Back Seat
1 pc.

C.
Seat
1 pc.

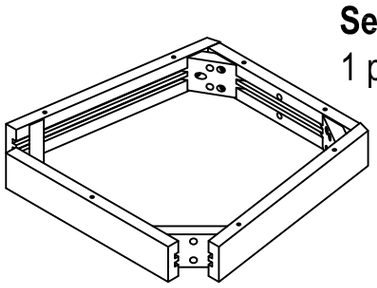

D.
Leg
1 pc.

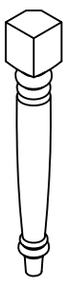

E.
Leg
1 pc.

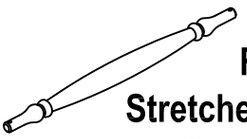

F.
Stretcher
2 pcs.

Hardware List

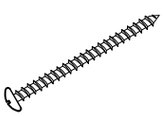

Screw (Long)
7 pcs. (+1 extra)

Screw (Short)
4 pcs. (+1 extra)

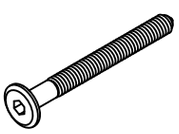

Bolt (Long)
4 pcs. (+1 extra)

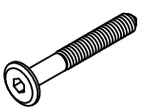

Bolt (Medium)
4 pcs. (+1 extra)

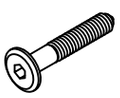

Bolt (Short)
2 pcs. (+1 extra)

Flat Washer
10 pcs. (+1 extra)

Spring Washer
10 pcs. (+1 extra)

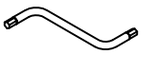

Allen Key
1 pc.

Hex Wrench (Small)
1 pc.

Tools Required For Assembly : *Phillips* screwdriver

Home Styles Consumer Assistance: *www.homestyles-furniture.com, servicedesk@homestyles-furniture.com, 888-680-7460, 877-831-0319*

Assembly Instructions 2/3

IMPORTANT

* *Do not tighten up all the bolts until each part is properly assembled.*
* *You should keep Allen Key in a safe place as you may need to tighten up the bolts in the future.*
* *Use a soft cloth between these parts and the floor.*

STEP 1

Attach Seat (C) to Back Seat (A) using Bolts (Long) and (Short), Flat Washers and Spring Washers.

Tighten Bolts using the Allen Key. (See figure 1)

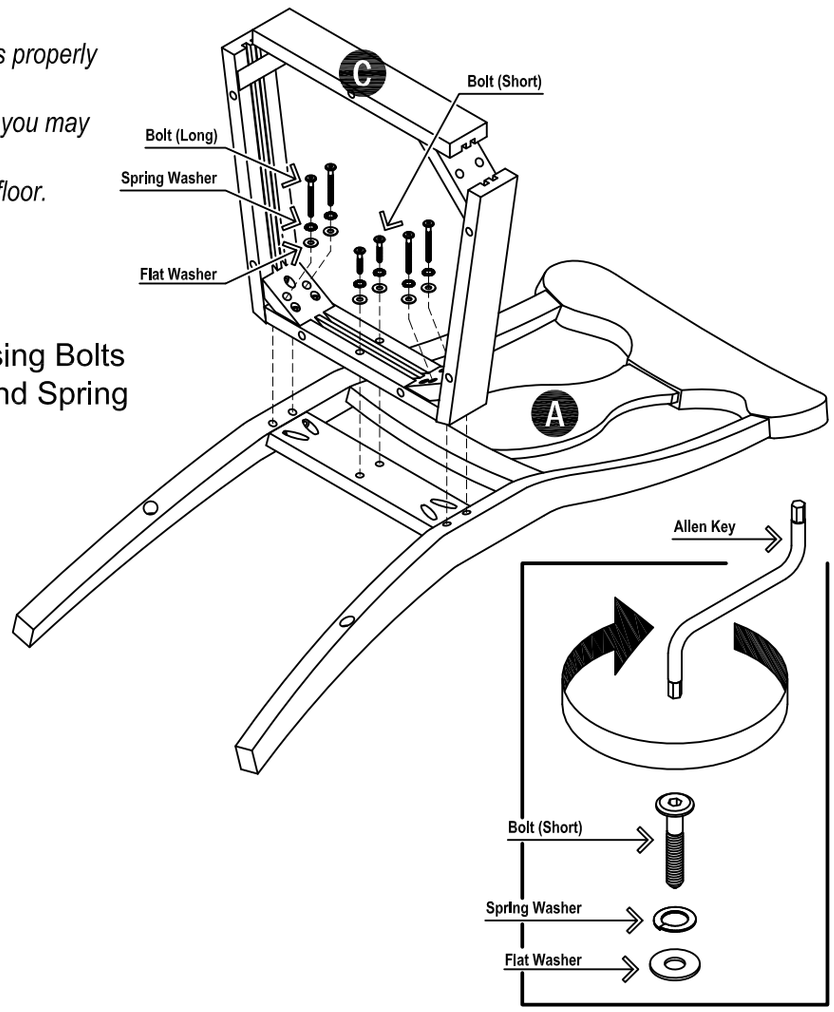

Figure 1

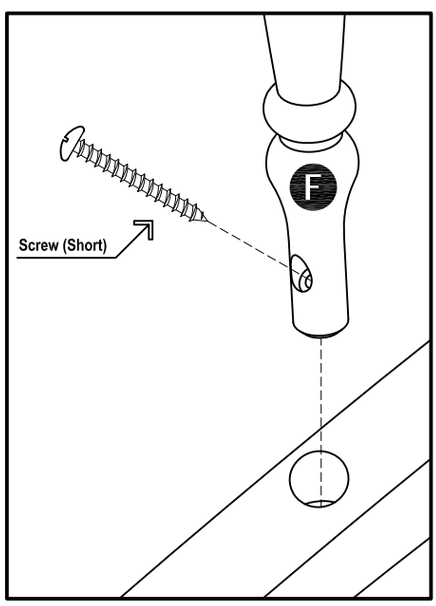

Figure 2

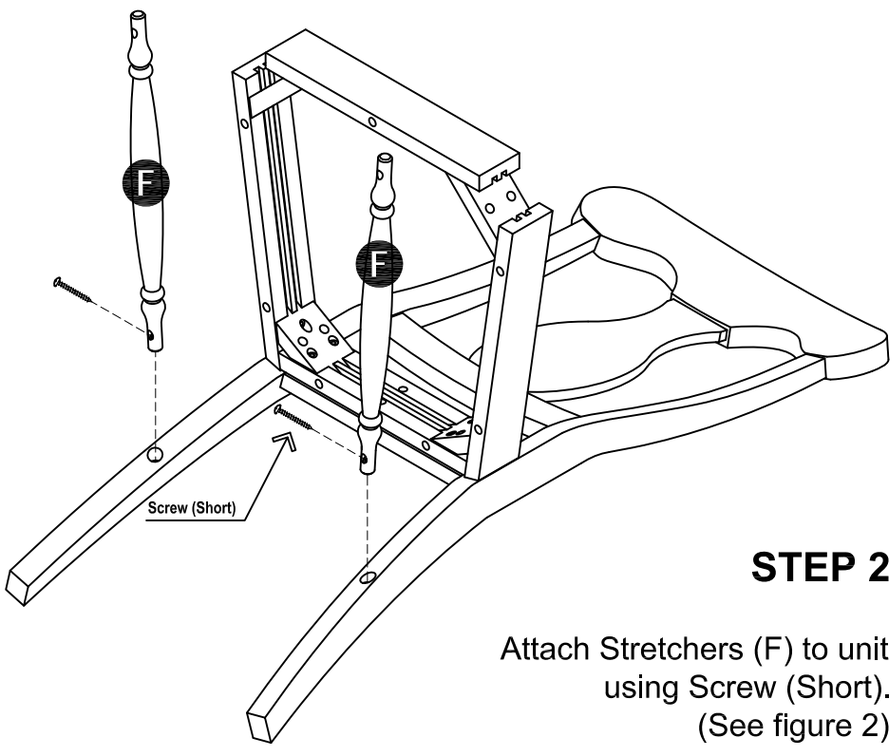

STEP 2

Attach Stretchers (F) to unit using Screw (Short). (See figure 2)

Assembly Instructions 3/3

STEP 3

Attach Legs (D) and (E) to unit using Screw (Short), Bolts (Medium), Flat Washers and Spring Washers.

Tighten Bolts using the Allen Key. (See figure 1)

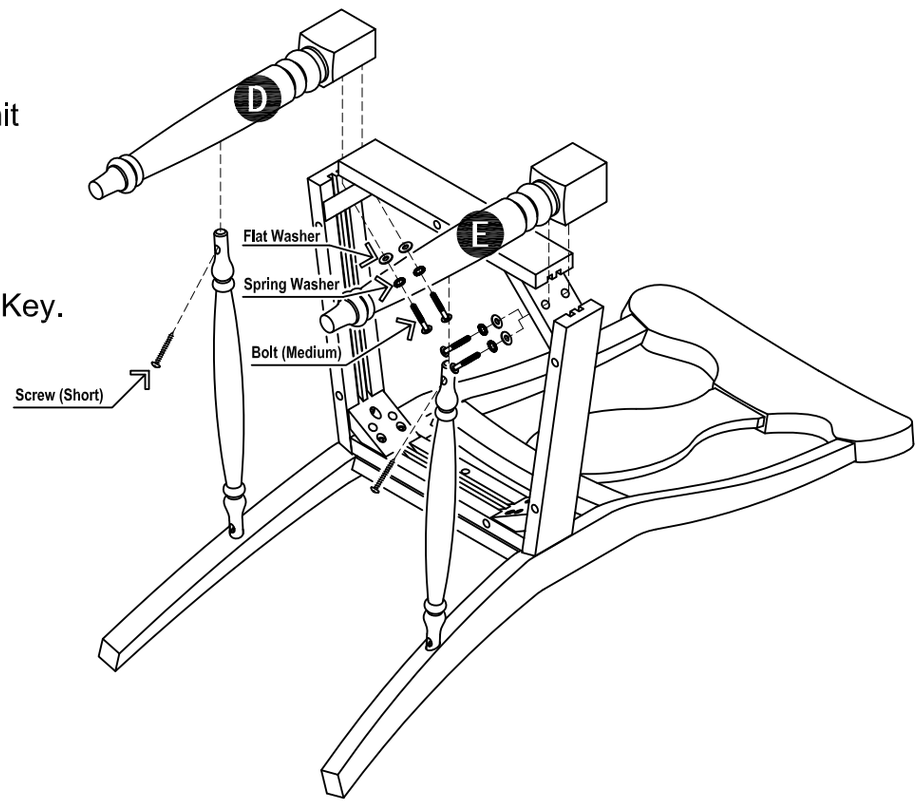

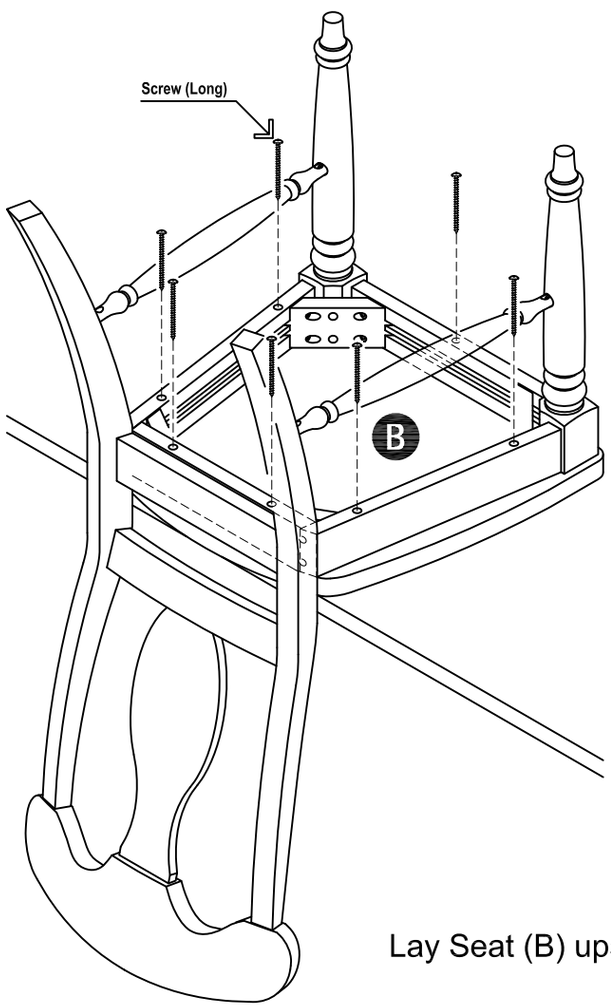

STEP 4

Lay Seat (B) upside down on a table and attach the unit to Seat (B) using Screw (Long).

VERY IMPORTANT !!

CARE INSTRUCTIONS

NEVER

USE GLASS CLEANERS ON FINISHED FURNITURE. AMMONIA WILL CHEMICALLY ATTACK THE LACQUER.

NEVER

ALLOW LIQUIDS OF ANY KIND TO REMAIN ON THE FURNITURE. ABSORPTION CAUSES WOOD TO WARP AND SPLIT AND FINISHES TO DELAMINATE.

DO NOT WRITE DIRECTLY ON SURFACE.

PREVENT MARKING

DO NOT PLACE IN DIRECT SUNLIGHT.

PREVENT FADING

DO NOT USE COMMERCIAL WAXES AND POLISHES.

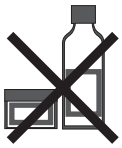

PREVENT YELLOWING

DO NOT PLACE HOT OBJECTS ON SURFACE.

PREVENT FINISH DAMAGE

DO NOT USE RUBBER BASED PLACE MATS.

PREVENT DISCOLORING

TO CLEAN

USE A SOFT CLOTH MOISTENED IN LEMON OIL POLISH OR LUKEWARM SOAP AND WATER, THEN BUFF WITH A DRY CLEAN CLOTH.

Home Styles will provide replacements free of charge for missing or damaged hardware or parts within 30 days of purchase. Digital images of the defective parts may be required. If this product was not purchased from an authorized retail affiliate, Home Styles is under no obligation to provide replacement parts. Parts are not available for fully assembled items nor are parts available for sale. Replacements for missing or damaged hardware or parts may be requested at:
www.homestyles-furniture.com/customer_service

Home Styles Consumer Assistance: *www.homestyles-furniture.com, servicedesk@homestyles-furniture.com, 888-680-7460, 877-831-0319*