NEVIS PANEL LOW PROFILE

TWIN AND FULL SIZE

MFI MODUS FURNITURE INTERNATIONAL

ASSEMBLY INSTRUCTIONS

Component Check List
- 1 x Headboard
- 1 x Footboard
- 2 x Side Rails
- 4 x Bed Slats

Fitting Checklist
- 8 x Phillips head wood screws
- 8 x Phillips headbolts
- 8 x Washers

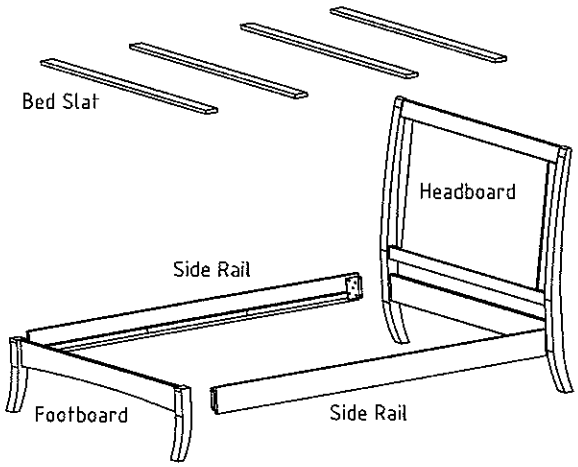

Step One
Fix the two side rails to headboard using two washers and two phillips headbolts per rail.
Repeat with Footboard.

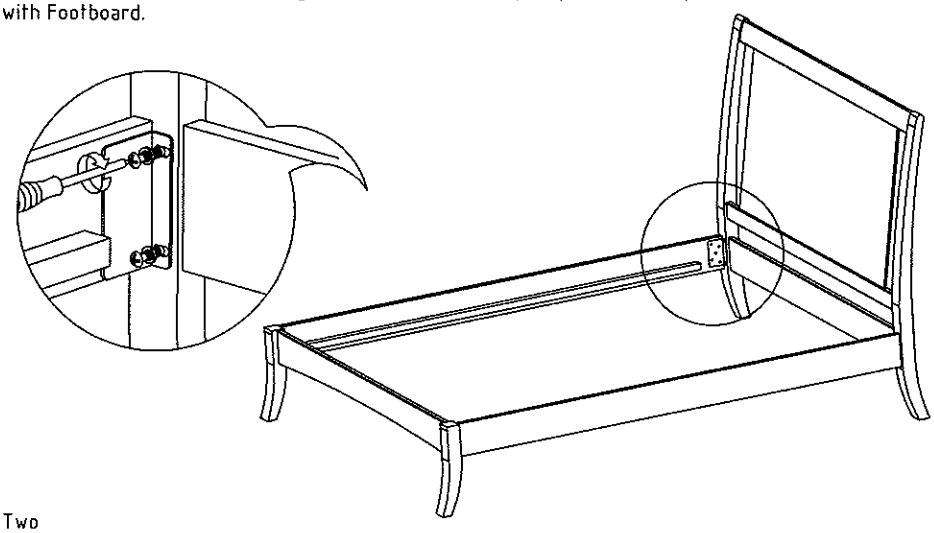
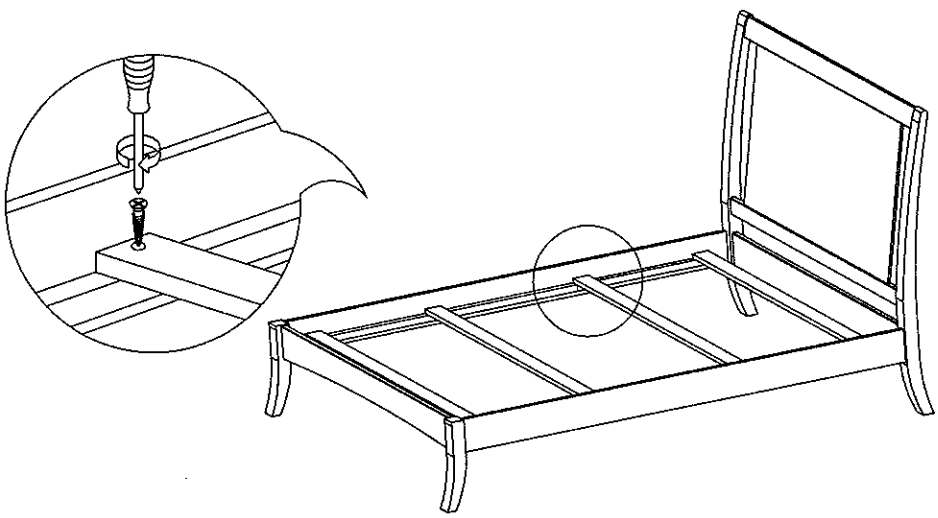
Step Two
Place slat assembly onto the bed assembly and fix using the phillips head wood screws. Make sure each corner has been fixed to the bed assembly.