HZ675300TX
Kenton One Drawer/Three Basket Storage Assembly Instruction

For assistance with assembly contact:
Southern Enterprises Inc.
Customer Service 1-800-633-5096
service@seidal.com
www.seidal.com

PO#13440

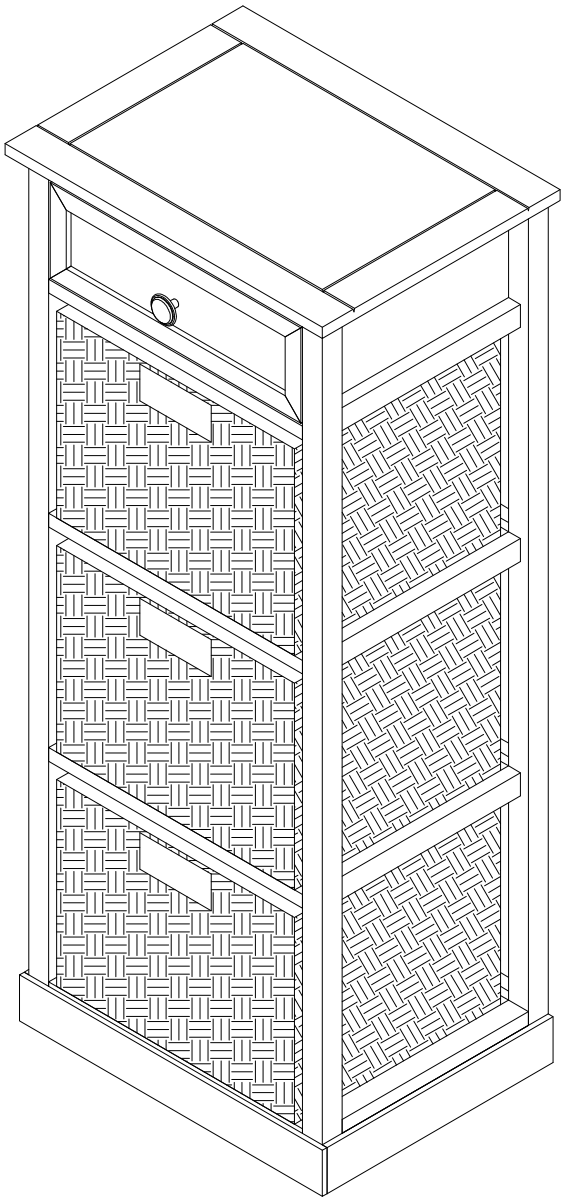

HZ675300TX

Kenton One Drawer/Three Basket Storage

Parts List

Please review all parts and hardware before disposing of any packaging.
Call Customer Service if missing hardware. Do not return to store/retailer.
Using a screw that is too long will cause damage. Before beginning assembly, separate each type of screw. Carefully study the screw diagrams below.
You may receive extra hardware with your unit.

A — 1pc

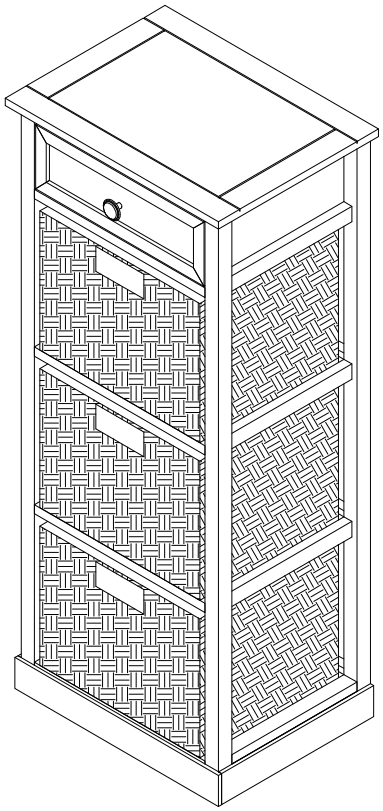

Cabinet

1 — 1pc

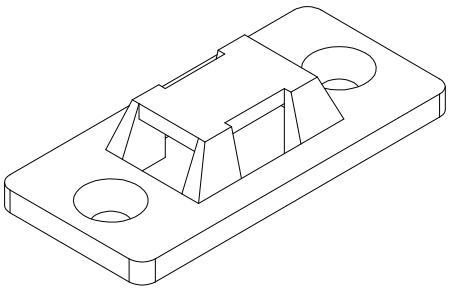

Bracket

2 — 1pc

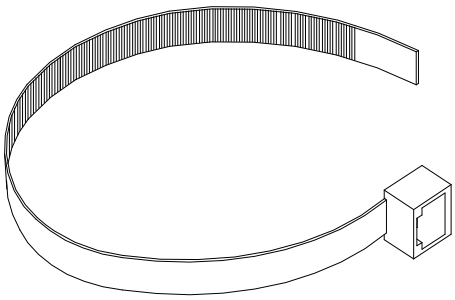

Plastic Strap

3 — 2pcs

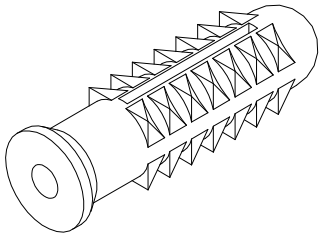

Wall Anchor Ø5/16” x 1-3/16”

4 — 2pcs

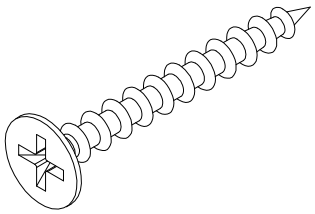

Flat Screw Ø11/64” x 1-3/16”

Care and Cleaning Instructions:
Before using, wipe with a clean, dry cloth. Periodically apply furniture wax to renew the finish. Avoid rubbing or scratching the surface with rough or abrasive objects.

For replacement parts or questions, please call Customer Service at 1-800-633-5096.

Assembly Tool Required
No.2 Phillips Screwdriver, Drill, 3/16ths Drill Bit.

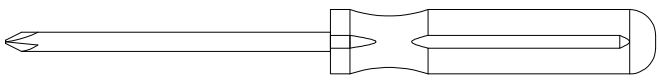

HZ675300TX
Kenton One Drawer/Three Basket Storage
Assembly Instructions

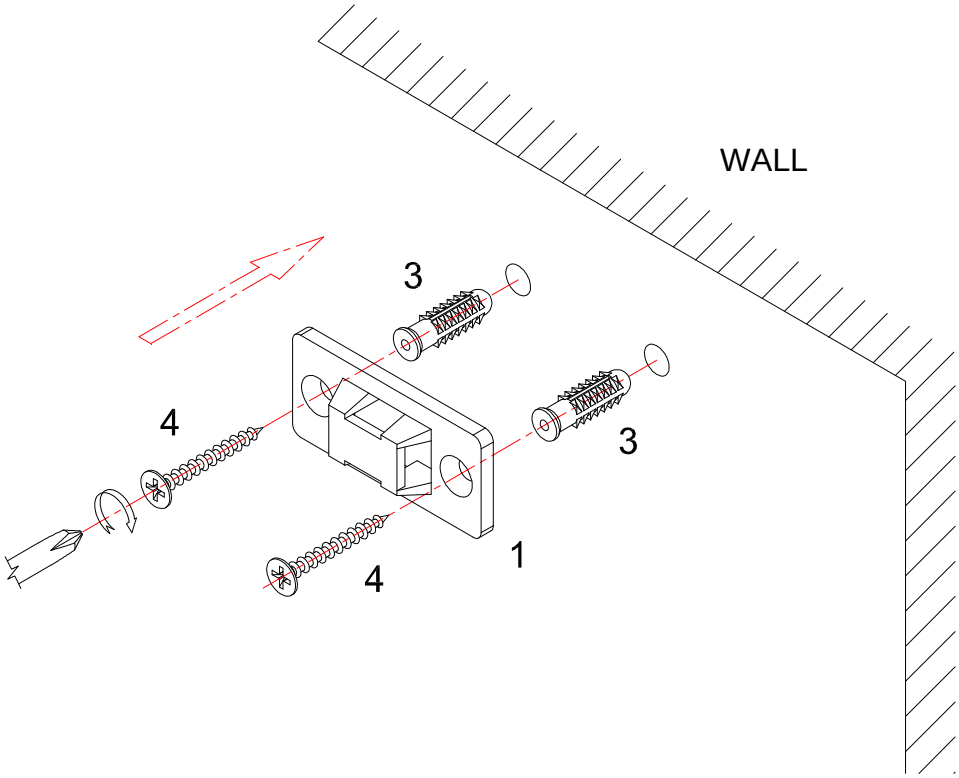

ANTI- TIPPING HARDWARE MUST BE USED FOR THIS PRODUCT TO AVOID TIPPING AND INJURY

Step 1:
Attach Bracket **(1)** to top of Cabinet **(A)**.

Drill two holes on wall using a 3/16ths drill bit at same height as Bracket on Cabinet.

Insert Wall Anchors **(3)** to wall and gently tap them in using a hammer. Then, attach Bracket **(1)** to wall using Flat Screws **(4)** as shown.

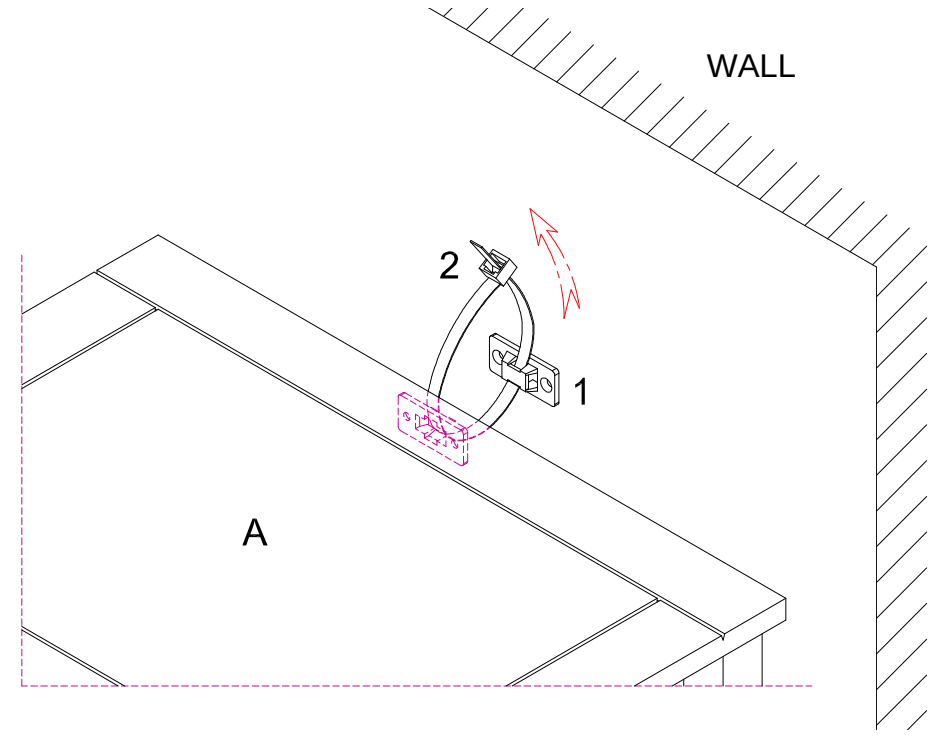

Step 2:

Attach Plastic Strap **(2)** to Brackets **(1)** on the wall and Cabinet **(A)** as shown.

Parts Replacement Form

Customer Information

Name _____

Address _____

City/State/Zip Code _____

Phone Number _____

Please indicate where you purchased this item: Store/Website/Catalog

_____

Please indicate color/size/style number:

_____

Style No	Parts Letter	Parts Description	Quantity Needed

Please immediately examine this product carefully. Any request for missing parts or damage replacement must be received within 90 days of your receipt of the product. Replacement, if available, will be honored within this time frame. Parts will not be available for items arriving fully assembled. We do not recommend modifying product(s) and we are not responsible for any damages due to product modification(s). If damages or missing parts are not reported within 90 days of your receipt, we are under no obligation to provide parts or replacement merchandise.

For product issues, please contact Southern Enterprises at 800-633-5096 (toll-free) / 972-869-0111 (Dallas) Mon-Fri 9am – 4pm CST, or email us at service@seidal.com. Please ask for customer service representative for issues involving damages or replacement parts. Please ask for technical assistance representative for any issues with product and assembly/construction.

Please contact the retailer that you purchased from for returns.

Southern ENTERPRISES

Customer Service 1-800-633-5096
service@seidal.com
Southern Enterprises, Inc.
600 Freeport Parkway, Suite 200
Coppell, Texas 75019