ILL-133FH-PC

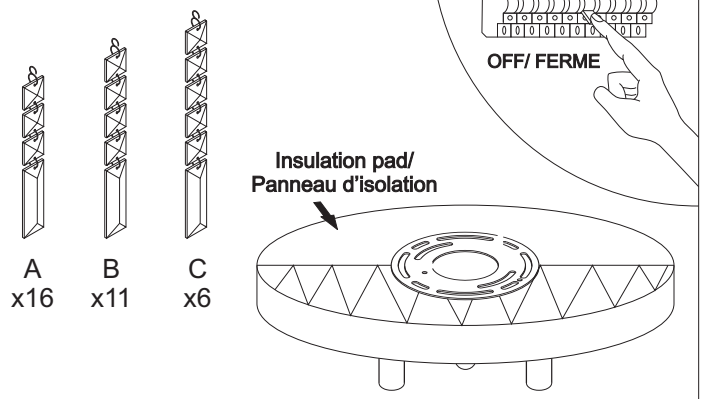

1

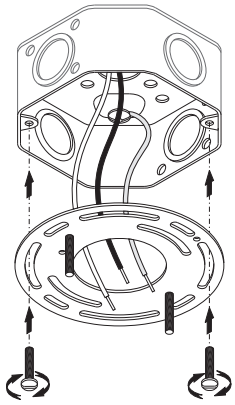

2

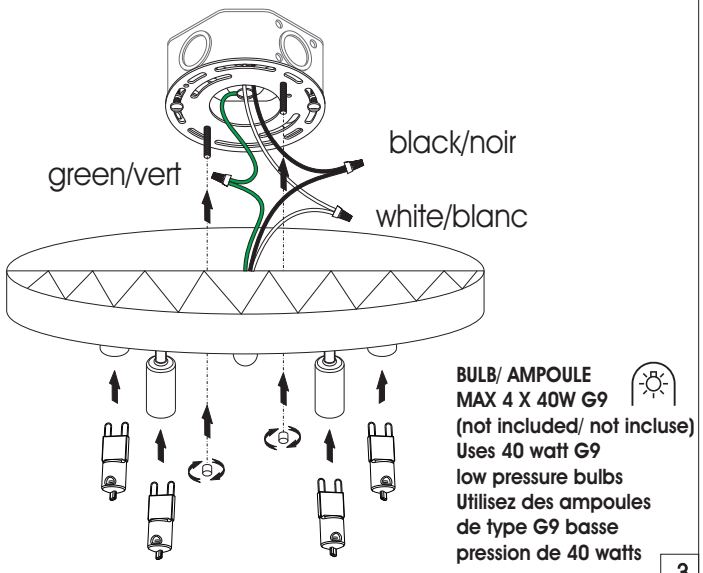

3

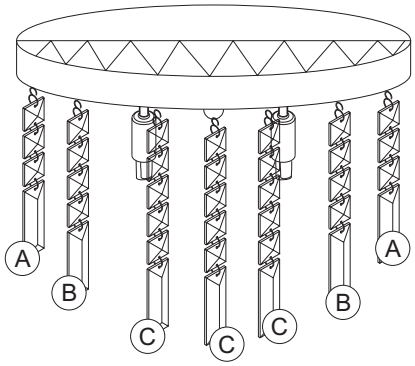

4

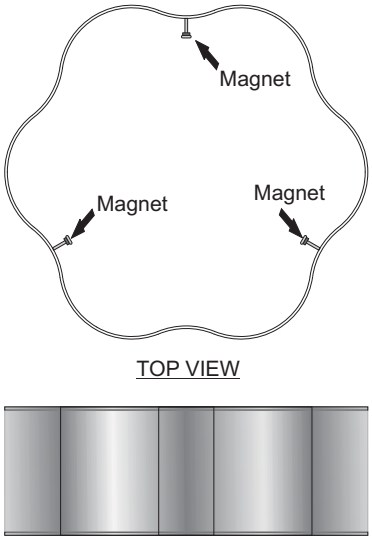

5

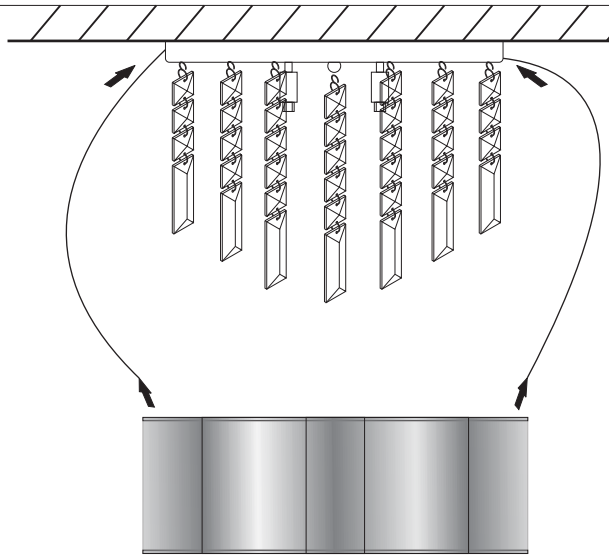

6

1401 Courtneypark Drive East, Mississauga, Ontario, Canada, L5T 2E4
Tel: 905.564.1262 Fax: 905.564.1299 E-mail: dainolite@dainolite.ca Web: www.dainolite.ca

1 Sep 2011