CK322500TX
HAYDEN TRUNK END TABLE-BLACK
Assembly Instruction

For assistance with assembly contact:
Southern Enterprises Inc.
Customer Service 1-800-633-5096
service@seidal.com
www.seidal.com

PO#11644

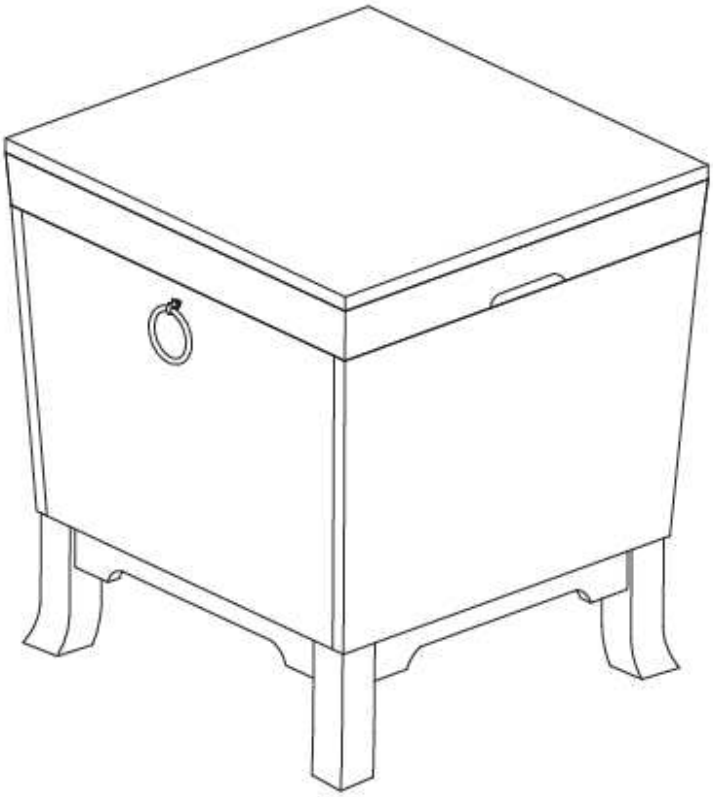

CK322500TX
HAYDEN TRUNK END TABLE-BLACK
Parts List

Please review all parts and hardware before disposing of any packaging. Call Customer Service if missing hardware. Do not return to store/retailer. Using a screw that is too long will cause damage. Before beginning assembly, separateeach type of screw. Carefully study the screw diagrams below. You may receive extra hardware with your unit.

A 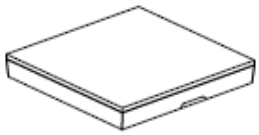 **Quantity Of 1** Top	B **Quantity Of 2** Side Panel	C 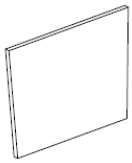 **Quantity Of 1** Front Panel
D 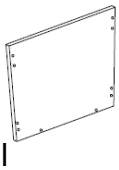 **Quantity Of 1** Back Panel	E 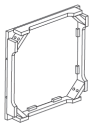 **Quantity Of 1** Bottom Panel	F **Quantity Of 4** Leg
1 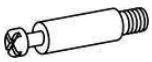 **Quantity Of 16** Cam Bolt 1/4”x1-1/2”	2 **Quantity Of 16** Cam Lock 5/8”x1/2”	3 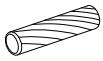 **Quantity Of 8** Dowel 5/16” x1-1/4”
4 **Quantity Of 8** Bolts 1/4”x1-3/4”	5 **Quantity Of 8** Lock Washer 1/4”	6 **Quantity Of 8** Flat washer 1/4”x3/4”
7 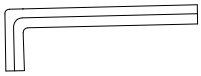 **Quantity Of 1** Wrench 1/4”	8 **Quantity Of 1** Support	9 **Quantity Of 16** Screw ϕ1/8”x5/8”
10 **Quantity Of 2** Knob	11 **Quantity Of 2** Bolts 5/32”x 1/2”	12 **Quantity Of 2** Hinge

Care and Cleaning Instructions:
Before using, wipe with a clean, dry cloth. Periodically apply furniture wax to renew the finish. Avoid rubbing or scratching the surface with rough or abrasive objects.

For replacement parts or questions, please call Customer Service at 1-800-633-5096. Do not return product to store. Please call manufacturer for assistance, questions or parts.

Assembly Tool Required
No.2 Phillips Screw Driver

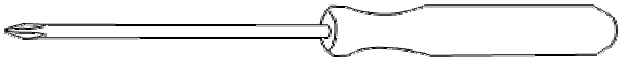

CK322500TX
HAYDEN TRUNK END TABLE-BLACK
Assembly Instruction

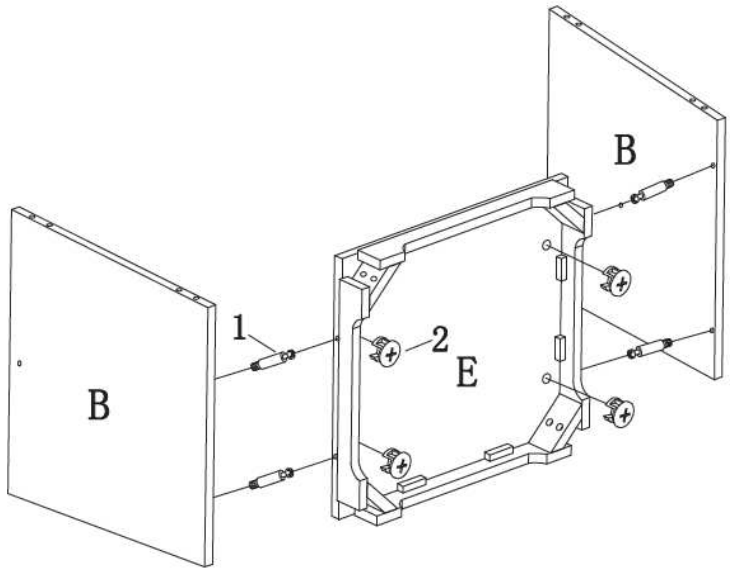

Step 1:

PLEASE DO NOT OVER-TIGHTEN CAMBOLTS. PLEASE STOP WHEN YOU FEEL TIGHT

Attach Side Panel (B) to bottom panel (E) by using cam bolt (1) and cam lock (2) as shown.

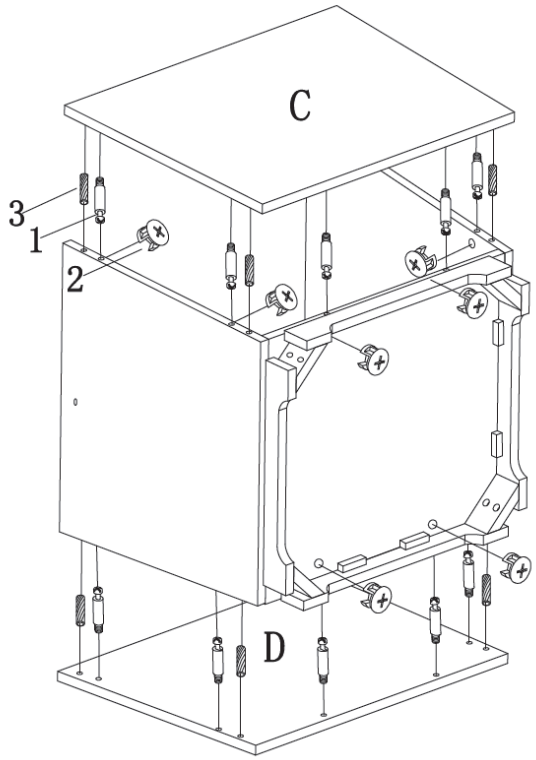

Step 2:

Attach Back Panel (D),Front Panel (C) to Side Panel (B) and bottom panel (E) by using cam bolt (1) and cam lock (2) and dowel (3) as shown.

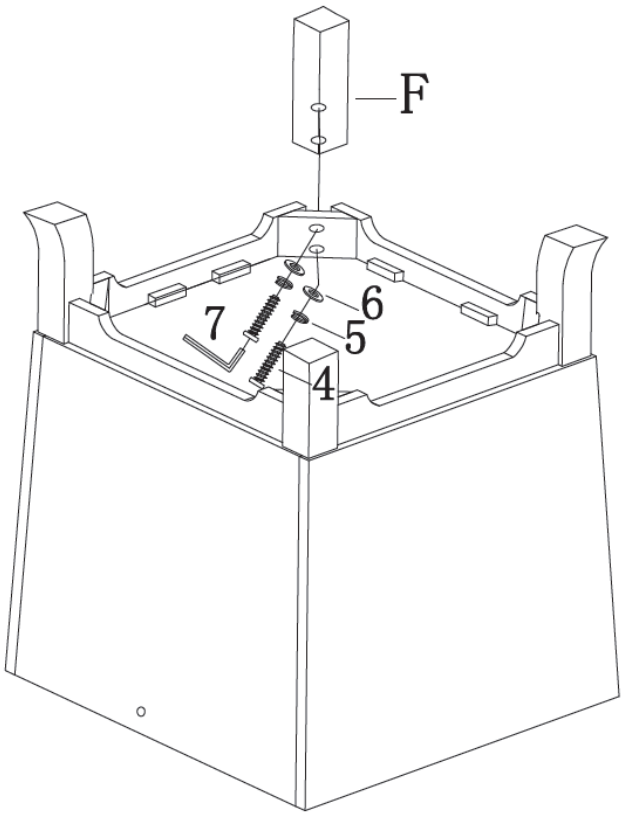

Step 3:

Attach Leg (F) to bottom panel (E) by using bolt (4) and Lock Washer (5) Flat washer (6) as shown.

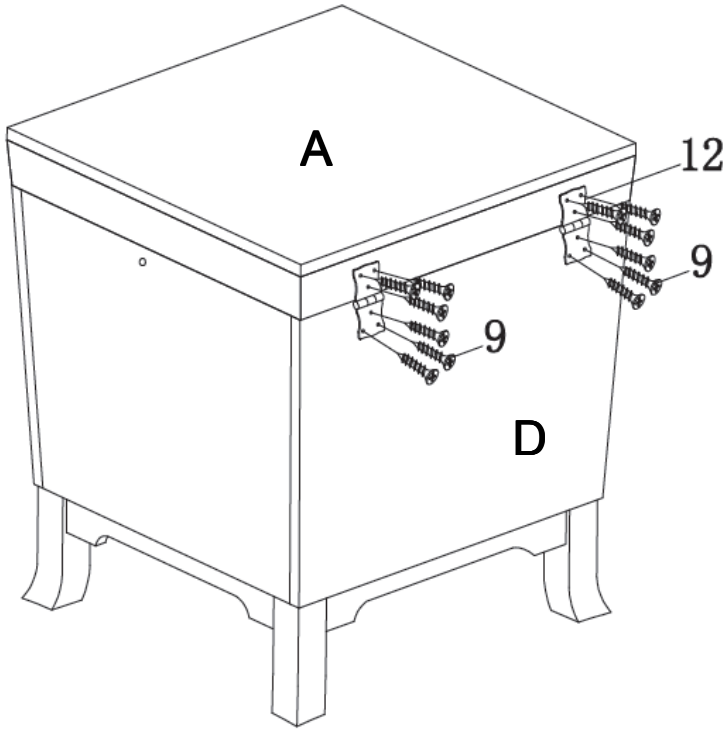

Step 4:

Attach Hinge 12 to back panel (E) and top panel(A) by using screws 9 as shown and then tighten all screw by phillips screwdriver(not included)

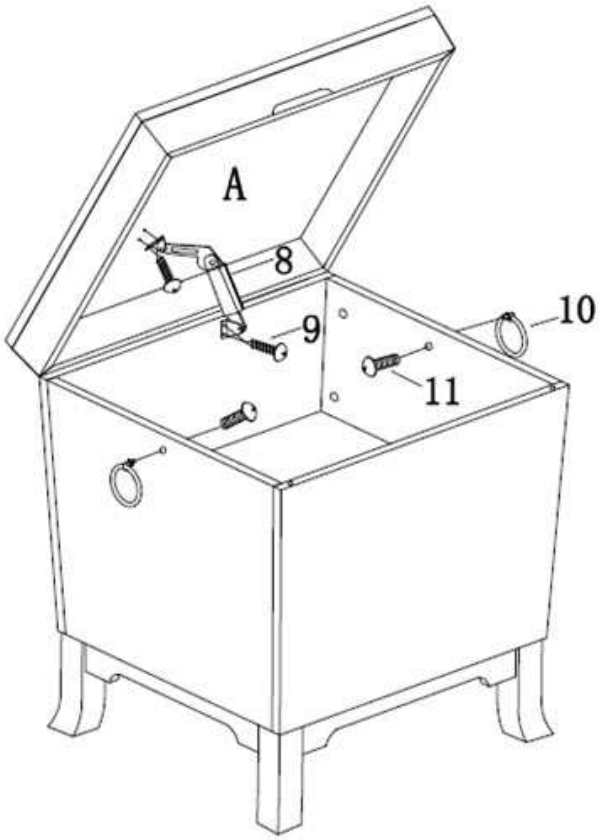

Step 5:

Open the top (A), attach support (8) to the top (A) and trunk base by using screw (9) and phillips screwdriver to tighten it as shown. Attach knob (10) to Side Panel (B) by using screw (11) as shown.

Parts Replacement Form

Customer Information

Name

Address

City/State/Zip Code

Phone Number

Please indicate where you purchased this item: Store/Website/Catalog

Please indicate color/size/style number:

Style No	Parts Letter	Parts Description	Quantity Needed

Please immediately examine this product carefully. Any request for missing parts or damage replacement must be received within 90 days of your receipt of the product. Replacement, if available, will be honored within this time frame. Parts will not be available for items arriving fully assembled. We do not recommend modifying product(s) and we are not responsible for any damages due to product modification(s). If damages or missing parts are not reported within 90 days of your receipt, we are under no obligation to provide parts or replacement merchandise.

Please contact Southern Enterprises at 800-633-5096 or in Dallas 972-869-0111/ 9am – 4pm Mon-Fri Central time if you have product issues or email us at service@seidal.com. Please ask for customer service representative for issues involving damages or replacement parts. Please ask for technical assistance representative for any issues with product and assembly/construction

Please contact the retailer that you purchased from for returns.

Customer Service
1-800-633-5096
service@seidal.com
Southern Enterprises, Inc.
600 Freeport Parkway, Suite 200