Installation & Servicing Instructions

High efficiency condensing gas boiler

E60SRN/E85SRN/E110SRN
E60SRP/E85SRP/E110SRP

Pictured: E60SRN, E85CRN, E110CRN
E60SRP, E85CRP, E110CRP

CAUTION!
Read this manual thoroughly before installing, servicing, putting into operation or using this boiler and vent system.

WARNING!
Improper installation, adjustment, alteration, service or maintenance can cause property damage, personal injury (exposure to hazardous materials) or loss of life. Refer to the user's information manual provided with this boiler. Installation and service must be performed by a licensed professional, service agency or the gas supplier (who must read and follow the supplied instructions before installing, servicing, or removing this boiler).

CAUTION!
The user manual is part of the documentation that is delivered to the installation's operator. Go through the information in this manual with the owner/operator and make sure that they are familiar with all necessary operating instructions.

NOTICE!
Installation and service must be performed by a qualified installer, service technician or the gas supplier.
In the Commonwealth of Massachusetts this boiler must be installed by a licensed Plumber or Gas Fitter.

C US
Low Lead Content
NSF/ANSI 372
Wall-hung Condensing Boilers:
E60SR, E85SR, E110SR

DESIGN CERTIFIED

CERTIFIED

WARNING!
If you do not follow these instructions exactly, a fire or explosion may result causing property damage, personal injury or loss of life.

- **Do not store or use gasoline or other flammable vapors and liquids in the vicinity of this or any other appliance.**
- **WHAT TO DO IF YOU SMELL GAS**
  - **Do NOT try to light any appliance.**
  - **Do NOT touch any electrical switch.**
  - **Do NOT use any phone in your building.**
  - **Immediately call your gas supplier from a neighbor's phone. Follow the gas supplier's instructions.**
  - **If you cannot reach your gas supplier, call the fire department.**

Rinnai®

EXPERIENCE OUR INNOVATION™

Address: 103 International Drive, Peachtree City, GA, 30269
Toll-free: 1-800-621-9419 • Fax: 678-829-1666 • www.rinnai.us

8U.51.61.00 / 03.16 *Changes reserved.*

These instructions to be retained by user.

Contents of instructions
These installation instructions contain important information for the safe installation, start-up and maintenance of boilers with capacities 60,000 through 110,000 BTU/hr.
These installation instructions are intended for licensed professionals, who have the necessary knowledge and are approved for working on heating and gas systems.

Subject to technical changes
Changes may be made without notice to the illustrations, process steps and technical data as a result of our policy of continuous improvement.

Updating of documentation
Please contact us if you have any suggestions for improvements or corrections.

California Proposition 65 lists chemical substances known to the state to cause cancer, birth defects, death, serious illness or other reproductive harm. This product may contain such substances, be their origin from fuel combustion (gas, oil) or components of the product itself.

Content

1 Safety and general instructions 4
1.1 Designated use 4
1.2 Hazard definitions 4
1.3 Symbol definitions 4
1.4 The following instructions must be followed 5
1.5 Follow these instructions for the space heating water 6
1.6 Tools, materials and additional equipment 6
1.7 Relevant Installation, Service and User manuals 7
1.8 Disposal 7
2 Regulations and guidelines 7
3 Description of the boiler 8
4 Packaging and transportation 9
4.1 Scope of delivery 9
4.2 Transportation 9
5 Installation 10
5.1 Requirements for the installation room 10
5.2 Fitting the boiler 11
5.3 Dimensions 12
5.3.1 Clearances from boiler 13
5.4 Technical specifications 14
6 Connecting the boiler 15
6.1 Central heating system 15
6.1.1 Safety valve 20
6.1.2 Low water cut off 20
6.2 Boiler expansion tank 20
6.3 Underfloor heating system (plastic pipes) 20
6.4 Gas supply connection 20
6.4.1 Gas connection with natural gas 21
6.4.2 Gas connection with propane gas 22
6.5 Condensate drain pipe 23
6.6 Vent system and air supply system 24
6.6.1 Intake / Exhaust Guidelines 24
6.6.2a Examples vent and air supply systems (parallel) 26
6.6.2b Examples vent and air supply systems (low profile PP) 27
6.6.2c Examples vent and air supply systems (PP Twin pipe and Flex) 28
6.6.2d Boiler Exhaust Vent Hanfer and Support (Rigid Pipes) 29
6.6.3 Installation of the vent system 31
6.6.3.1 Conversion from parallel to concentric vent system 32
6.6.3.2 Installing air filter 32
6.6.4 Vent/air intake terminal position 33
6.6.5 Direct vent closet and alcove installation 35
6.6.6 Dimensioning of the exhaust and air intake duct 36
6.6.7 Combustion air and vent piping lengths. 37
6.6.8 Calculation of compensation factor 38
6.6.9 Room Air System (indoor combustion air) 39
7 External domestic hot water tanks 42
8 Electrical connections 43
9 Boiler controls 47
9.1 Explanation of the function buttons 48
10 Starting up: Filling and de-aerating the boiler and installation 49
10.1 Requirements of the water system 49
10.2 Filling the heating system 50
11 Adjustments 53
11.1 Altering adjustments 53
11.2 Activating factory settings (green button function) 56
12 Isolating the boiler 56
13 Commissioning 57
13.1 Testing for gas leaks 58
13.2 Testing the Ignition Safety shut off device 58
13.3 Checking the O_2 59
13.4 Measuring the ionization current 60
13.5 Installing the casing 60
14 Maintenance 61
14.1 Periodic examination of venting systems and boiler 61
14.2 Inspection 61
14.2.1 Visual inspection for general signs of corrosion 62
14.2.2 Measuring the ionization current 62
14.2.3 Measuring the inlet gas pressure 62
14.2.4 Testing for gas leaks 62
14.2.5 Carrying out a pressure test of the heating system 62
14.2.6 Checking venting systems 62
14.3 Maintenance activities 63
14.3.1 Reset service interval counter 64
14.4 Limited warranty 65
15 Parts of the boiler 66
16 Blocks and Errors 67
16.1 Error indication (short reference) 67
16.2 Blocks 68
16.3 Errors 69
16.4 Other Errors 73
17 Spare parts 75
18 Parts list vent system 83

Appendix A - Outoor Reset Sensor Data and Resistance table NTC sensors 86
Appendix B - Optional Accessories Low Loss Header 87
Appendix C - Approved system cleaners, inhibitors and antifreeze 90

1 Safety and general instructions

Please observe these instructions in the interest of your own safety.

1.1 Designated use

The boiler is designed for heating water for a central heating system. The boiler is delivered with a burner controller (MCBA) pre-installed.The boiler can be fitted with a outdoor reset sensor (included with the boiler) or an On/Off thermostat or relay panel end switch (field supplied accessories).

1.2 Hazard definitions

The following defined terms are used throughout the documentation to bring attention to the presence of hazards of various risk levels. Notices give important information concerning the operation of the product.

DANGER

DANGER:
Indicates the presence of hazards that will cause severe personal injury, death or substantial property damage.

WARNING

WARNING:
Indicates the presence of hazards that can cause severe personal injury, death or substantial property damage.

CAUTION

CAUTION:
Indicates presence of hazards that will or can cause minor personal injury or property damage.

CAUTION

CAUTION:
Risk of electric shock. Indicates presence of hazards due to electric shock.

NOTICE

NOTICE:
Indicates special instructions on installation, operation or maintenance that are important but not related to personal injury or property damage.

1.3 Symbol definitions

The following (safety) symbols may be encountered in these installation instructions and on the unit:

This symbol indicates that the unit must be stored away from freezing conditions.

This symbol indicates that the packaging and/or contents can be damaged as a result of insufficient care taken during transport.

This symbol indicates that, while still in its packaging, the unit must be protected from weather conditions during transport and storage.

1.4 The following instructions must be followed

- The boiler must only be used for its designated purpose, as described in the Installation Instructions.
- Each unit is fitted with a data plate. Consult the details on this plate to verify whether the boiler is compliant with its intended location, e.g.: gas type, power source and venting classification.
- Only use the boiler with the accessories and spare parts listed.
- Other accessories and consumables may only be used if they are specifically designed for the intended application and do not affect the system performance and the safety requirements.
- Maintenance and repairs must be performed by licensed professionals.
- Gas utility/supplier may require reporting and/or approval of condensing gas boiler installations.
- You are only allowed to operate the condensing gas boiler with the vent system that has been specifically designed and approved for this type of boiler.
- Local codes governing the vent system and condensate water disposal must be followed.

You must also respect:
- The local building codes stipulating the installation rules.
- The local building codes concerning the air intake and outlet systems and the chimney connection.
- The regulations for the power supply connection.
- The technical rules established by the gas utility company concerning the connection to the local gas mains.
- The instructions and standards concerning the safety equipment for the water/ space heating system.
- The Installation Instructions for building heating systems.
- The boiler must be located in an area where leakage of the boiler or connections will not result in damage to the area adjacent to the boiler or to lower floors of the structure. When such locations cannot be avoided, it is recommended that a suitable drain pan be installed under the boiler.
- The boiler must be installed in such way that the all components are protected from water (dripping, spraying, rain etc.) during boiler operation and service.
- The boiler must not be installed on or against carpeting.
- Do not restrict or seal any air intake or outlet openings.
- If you find any defects, you must inform the owner of the system of the defect and the associated hazard in writing.

WARNING

Failure to properly commission the boiler as described in section 13 may result in unreliable burner operation, reduced component life, and unsafe boiler operation and may void the product warranty.

DANGER

DANGER. Gas is flammable and may cause an explosion.
Beware if you smell gas: there may be an explosion hazard!

If the information in these instructions is not followed exactly, a fire or explosion may result causing property damage, personal injury or death.
- Do not store or use gasoline or other flammable vapors and liquids in the vicinity of this or any other appliance.

WARNING

WHAT TO DO IF YOU SMELL GAS
- Do NOT try to light any appliance.
- Do NOT touch any electrical switch.
- Do NOT use any phone in your building.
- Immediately call your gas supplier from a neighbor's phone. Follow the gas supplier's instructions.
- If you cannot reach your gas supllier, call the fire department.

WARNING

Should overheating occur or the gas supply fail to shut off, do not turn off or disconnect the electrical supply to the pump. Instead, shut off the gas supply

NOTICE

at a location external to the appliance.
Chemicals that are corrosive in nature should not be stored or used near the boiler or vent termination.

1.5 Boiler System Water Requirements

Unsuitable heating system water can cause the formation of scale or sludge, which affects system efficiency. It can also cause corrosion and reduce life of the heat exchanger.

- You must follow Rinnai guidelines for boiler water quality.
- Thoroughly flush the system prior to filling.
- Follow the Rinnai cleaning instructions.
- Never use water that has been treated by a reverse osmosis, deionized, or distilled water to soften the water to fill the heating system.
- Do not use inhibitors or other additives unless approved by Rinnai for that purpose.
- When freeze protection of the heating system is desired, only use Rinnai-approved antifreezes. The allowed maximum concentration is 50%.
- When using oxygen-permeable pipes, e. g. for under floor heating systems, you must separate the system from the boiler using plate heat exchangers.
- Valve off boiler while flushing system, do not introduce any system cleaner into the boiler loop. Flush system thoroughly to remove all system cleaner before filling boiler.

Approved antifreeze: (max. concentration 50%)	• Rhomar RhoGard Mutli-Metal (AL safe) • Noble Noburst AL	• Sentinel X500 • Fernox Alphi 11
Approved system cleaner:	• Noble Noburst Hydronic System Cleaner • Rhomar Hydro-Solv 9100	• Fernox F3 Cleaner • Sentinel X400

NOTICE

The system cleaners from NoBurst, Rhomar, and Fernox are not to be used in the boiler. The boiler must be closed off (valved off) from the rest of the system or not connected while the cleaners are in the system. The system should then be drained and then thoroughly flushed with clean water to remove all the system cleaner.

Approved inhibitors:	• Rhomar Pro-tek 922 • Noble Noburst AL inhibitor	• Sentinel X100

See Chapter 6 and 9 of this manual for additional information.

NOTICE

If problems occur when using potable water with a chloride content higher than 150 mg/l, no recourse can be made to the terms of the limited warranty.

1.6 Tools, materials and additional equipment

For the installation and maintenance of the boiler you will need:

- Standard tools for space heating, gas and water fitting
- Digital manometer, capable of reading both positive and negative pressure
- Combustion analyzer (intended for use with condensing boilers)
- Digital multimeter capable of reading micro-amps
- pH digital meter or test strips
- Metric Allen wrenches
- Metric socket wrenches

In addition, a handtruck with a fastening belt is useful.

For maintenance of the boiler you will need, apart from standard tools for space heating, gas and water fittings the following items:

- Boiler toolkit

1.7 Relevant Installation, Service and User manuals

- Approved vent system
- User manual

1.8 Disposal

- Dispose of the boiler packaging in an environmentally sound manner.
- Dispose of components of the heating system (e.g. boiler or control device), that must be replaced in an environmentally responsible manner.

2 Regulations and guidelines

The installation must comply with the requirements of the authority having jurisdiction or, in the absence of such requirements, with the latest edition of the National Fuel Gas Code, ANSI Z223.1/NFPA 54.

Where required by the authority having jurisdiction, the installation must comply with the Standard for Controls and Safety Devices for Automatically Fired Boilers, ANSI/ASME CSD-1.

Install CO detectors per local regulations. Boiler requires an inspection every 2 years and maintenance every 4 years or 8000 hours. See maintenance section chapter 13.

Operating Limits of the boiler:
Max. boiler set point temperature: 176 °F (80.0 °C)
Max. operating pressure: 45 psi (3 bar)
Max. Allowable Working Temperature ASME: 200 °F (93 °C)
Max. Allowable Working Pressure ASME: 45 psi (3 bar)

NOTICE

FOR INSTALLATIONS IN THE COMMONWEALTH OF MASSACHUSETTS
NOTICE BEFORE INSTALLATION This direct-vent appliance must be installed by a licensed professional. If you are not properly trained, you must not install this unit.

IMPORTANT: In the State of Massachusetts (248 CMR 4.00 & 5.00)

For all side wall horizontally vented gas fueled equipment installed in every dwelling, building or structure used in whole or in part for residential purposes, including those owned or operated by the Commonwealth and where the side wall exhaust vent termination is less than seven (7) feet above finished grade in the area of the venting, including but not limited to decks and porches, the following requirements shall be satisfied:

1. INSTALLATION OF CARBON MONOXIDE DETECTORS. At the time of installation of the side wall horizontal vented gas fueled equipment, the installing plumber or gasfitter shall observe that a hard wired carbon monoxide detector with an alarm and battery back-up is installed on the floor level where the gas equipment is to be installed. In addition, the installing plumber or gasfitter shall observe that a battery operated or hard wired carbon monoxide detector with an alarm is installed on each additional level of the dwelling, building or structure served by the side wall horizontal vented gas fueled equipment. It shall be the responsibility of the property owner to secure the services of qualified licensed professionals for the installation of hard wired carbon monoxide detectors.

a. In the event that the side wall horizontally vented gas fueled equipment is installed in a crawl space or an attic, the hard wired carbon monoxide detector with alarm and battery back-up may be installed on the next adjacent floor level.
b. In the event that the requirements of this subdivision can not be met at the time of completion of installation, the owner shall have a period of thirty (30} days to comply with the above requirements; provided, however, that during said thirty (30} day period, a battery operated carbon monoxide detector with an alarm shall be installed.

2. APPROVED CARBON MONOXIDE DETECTORS. Each carbon monoxide detector as required in accordance with the above provisions shall comply with NFPA 720 and be ANSI/UL 2034 listed and IAS certified.

3 Description of the boiler

The Rinnai E-Series System boiler is a modulating condensing central heating boiler.

The boiler is provided with a compact stainless steel heat exchanger with smooth tubes.
The boiler burns gas to supply heat. The heat is transferred in the heat exchanger to the water in the central heating system. By cooling down the exhaust gases condensate is formed. This results in high efficiency. The condensate, which has no effect on the heat exchanger and the function of the boiler, is drained through a condensate collector trap.

Condensing
Retrieves heat as much as possible from the flue gasses. Water condenses on the heat exchanger.

The boiler is provided with an intelligent control system (CMS Control Management System). The boiler anticipates the heat demand of the central heating system.

Modulating
Stepless higher or lower burning according to the heat demand.

When an outdoor sensor is connected to the boiler it will operate weather dependantly using outdoor reset. This means that the boiler control measures the outside temperature and supply temperature. With this data the boiler calculates the optimal supply temperature for the installation. Outdoor reset lowers the boilers heating supply temperature when the weather is warmer, matching the heat loss of the building and maximizing efficiency.

Explanation of the appliance type: Rinnai E110SRN

E = Type
110 = Nominal load in (x1000) BTU
S = System (Heat only)
N = Natural Gas (P = Propane Gas)

Different boilertypes:

System boiler (Heat only)

E60SRN
E60SRP
E85SRN
E85SRP
E110SRN
E110SRP

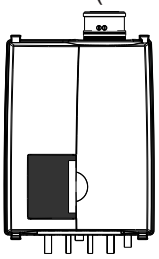

4 Packaging and transportation

4.1 Scope of delivery

The boiler is supplied ready for use.
- Please check if the packaging is intact.
- Check if all the items listed are included in the delivery.

The supply kit contents:

Description	Amount		
	E60SRN E60SRP	E85SRN E85CRP	E110SRN E110SRP
Part No. Fitting Kit complete:	803000022		
Boiler with:			
Outdoor reset sensor	1	1	1
22mm compression fitting ring	4	4	4
Nut W1.1/8x1/14 22 Compression fitting	2	2	2
Adapter fitting 22mm x 1"NPT ext.	2	2	2
Screw 4,8X16mm	4	4	4
Line voltage input connector 3 pole grey	1	1	1
Cap de-aerator	1	1	1
Water lock 1/2"NPT ext.x1/4"NPT int.	1	1	1
Mano-/thermometer 1/4"NPT 64	1	1	1
Safety valve 4 bar 3/4"NPT ext.	1	1	1
Feed through + plug flue gas	1	1	1
Flue adapter Ø80/Ø3" pps UL appr.	1	1	1
Air supply adapter Ø80/Ø3" pps UL appr.	1	1	1
Lip-ring flue pipe ø80	1	1	1
Wall mounting bracket HEX1/2S	1	1	1
Template	1	1	1
Installation & Service Instructions	1	1	1
User information manual	1	1	1
Warranty document	1	1	1
ICSL book	1	1	1
User information manual	1	1	1
Warranty document	1	1	1
ICSL book	1	1	1

4.2 Transportation

CAUTION **The boiler may be damaged when not secured properly.**

- Only transport the boiler using appropriate transportation equipment, such as a handtruck with a fastening belt or special equipment for maneuvering steps.
- When transporting the boiler must be secured on the transportation equipment to prevent it from falling off.
- Protect all parts against impacts if they are to be transported.
- Follow the transportation markings on the packaging.

- Packaged boilers must always be lifted and carried by two people, or you must use a handtruck or special equipment for transport.

5 Installation

5.1 Requirements for installation location

DANGER

- **This boiler is intended for indoor installations only.**
- **The room where the boiler will be placed must always be free from freezing conditions.**
- **Do not store or use gasoline or other flammable vapors and liquids in the vicinity of this or any other appliance.**
- **Never use or store any chlorinated detergents or halogenated hydrocarbons (e.g. in spraycans, solvents and detergents, paints, adhesives) in proximity of the boiler.**
- **The boiler must be installed in such a way that it is protected from water (dripping, spraying, rain, etc.) during boiler operation and service (circulator replacement, condensate trap, control replacement, etc.)**

Keep the following listed products away from the boiler and/or around combustion air intake
Spray cans containing chloro-/fluorcarbons
Ammonium and/or ammonium solutions
Permanent wave solutions (hair product)
Laundry equipment
Chlorinated waxes and/or cleaners
Swimming pool chemicals based on chlorine
Calcium chloride used for thawing
Sodium chloride used for water softening
Refrigerant leaks
Paint or varnish removers
Hydrochloric acid/muriatic acid
Cements and glues
Antistatic fabric softeners used in clothes dryers
Chlorine-type bleaches, detergents, and cleaning solvents found in household laundry rooms
Adhesives used to fasten building products and other similar products
Areas likely to have contaminants
Dry cleaning/laundry areas and establishments
Swimming pools
Metal fabrication plants
Beauty shops
Refrigeration repair shops
Photo processing plants
Auto body shops
Plastic manufacturing plants
Furniture refinishing areas and establishments
New building construction
Remodeling areas
Garages with workshops

5.2 Mounting the boiler

- Remove the packaging materials.

NOTICE

- **Lay the boiler on its back during unpacking. Remove the cover from the boiler. This part may be left off during installation. It must be placed on the boiler and fixed with the screw behind the door and in the 4 quick releases before the boiler is started up.**

NOTICE

Turn the boiler to its side and remove the wall bracket from the back of the boiler by removing the 2 screws.

The boiler can be mounted practically to any wall with the suspension bracket and the enclosed mounting equipment.

- The wall must be flat and of sufficient strength in order to be able to securely hold and support the boiler weight with its water content.
- Take note of the necessary space around the boiler for installation of venting system, pipework and servicing. See drawing on pages 12 and 13.
- Drill the necessary holes using the template
- Install the mounting bracket to the wall
- The boiler must be installed using the included mounting hardware.

CAUTION

Lifting and carrying precautions:
To avoid personal injury please follow these recommendations:

- **Always lift the boiler with 2 people or use special equipment.**
- **When lifting the boiler, bend the knees, and keep the back straight and feet apart.**
- **Do not lift and twist at the same time.**
- **Lift and carry the boiler close to the body.**
- **Wear protective clothing and gloves to protect from any sharp edges.**

WARNING

Lift the boiler only by the boiler's rear wall. Do not lift using the pipes on the bottom of the boiler or the vent connections on the top of the boiler.

5.3 Dimensions

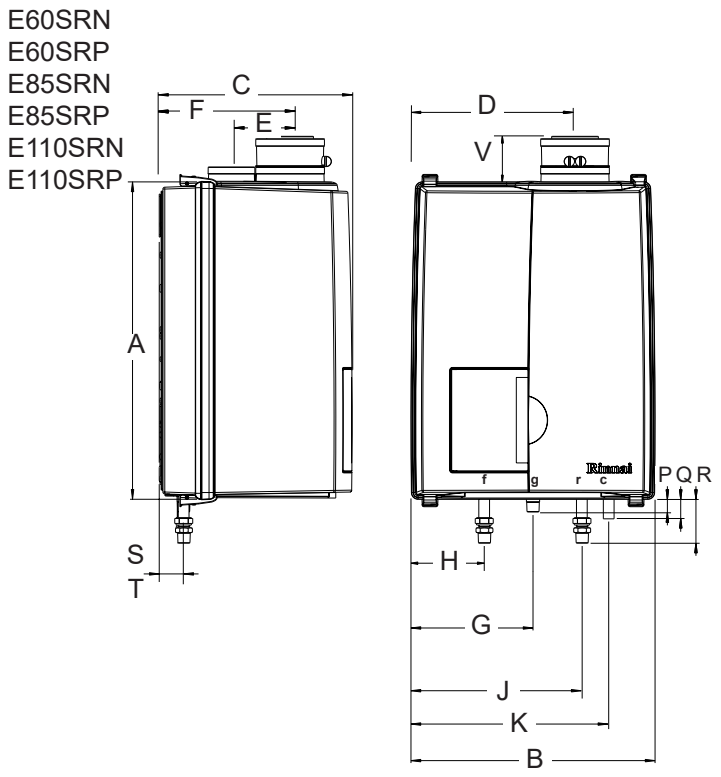

dimensions figure 1

	Boiler type	System Dimensions E60SRN / E60SRP E85SRN / E85SRP E110SRN / E110SRP		Connection diameter E60SRN / E60SRP E85SRN / E85SRP E110SRN / E110SRP
		inches / mm		inches / mm
A	Height	25.6" / 650		
B	Width	19.7" / 500		
C	Depth	15.6" / 395		
D	Left side / vent	13.2" / 335		
E	Center to center / vent and air supply	4.7" / 120		
F	Back / vent	10.6" / 270		
G	Left side / gas pipe	9.8" / 250	g	3/4"M-NPT
H	Left side / supply pipe	5.9" / 150	f	0.59" x 1"M-NPT / 22mm
J	Left side / return pipe	13.8" / 350	r	0.59" x 1"M-NPT / 22mm
K	Left side / condensate pipe	15.9" / 405	c	0.87" / 22mm
P	Pipe length of g	1" / 26		
Q	Pipe length of c	1.6" / 40		
R	Pipe length of f and r	3.7" / 95		
S	Back / Center of pipe c	1" / 25		
T	Back / Center of pipe f, g and r*	1.9" / 49		
V	Pipe length concentric vent and air supply	7" / 177		80/125mm

dimensions table 1

5.3.1 Clearances from boiler

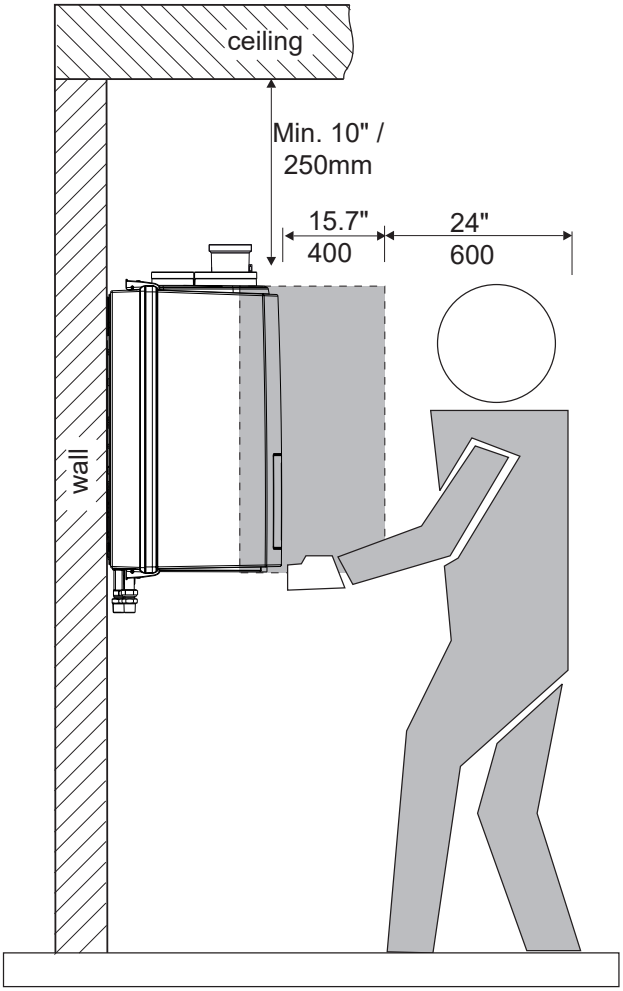

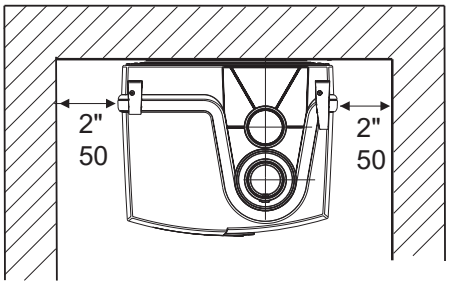

service clearances to the boiler figure 4

	Minimum required clearances to combustibles All types	Minimum required clearances to non-combustibles All types	Required service clearances All types
	inch / mm	inch / mm	inch / mm
Top of boiler	0"	0"	10" / 250
Back of boiler	0"	0"	0"
Front of boiler	1" / 25	1" / 25	24" / 600
Left side of boiler	0"	0"	2" / 50
Right side of boiler	0"	0"	2" / 50
Floor / Ground to bottom of boiler	0"	0"	10" / 250 30" / 762 is recommended
Vent	0"	0"	0"

clearances to the boiler table 3

For closet installation: clearance is 1” / 25mm from the front.

5.4 Technical specifications

Boiler type		E-Series System E60SRN E60SRP	E85SRN E85SRP	E110SRN E110SRP
Input Hs CH	BTU/hr	60,000	85,000	110,000
	kW	17.6	24.9	32
Q_n Output non-condensing CH	BTU/hr	54000	76500	99000
	kW	15.8	22.4	28.8
Q_n Output EN677 efficiency CH	BTU/hr	59100	83600	108,000
	kW	17.3	24.5	31.4
Q_n Output AFUE CH	BTU/hr			105,700
	kW			30.7
Efficiency at 98.6/86°F (36/30°C) part load, Hs, EN677 CH	%	99.0	99.0	99.0
AFUE efficiency rating	%	95.5	95.4	95.5
O_2 (at full load)	%	Natural gas: 4.4 - 4.7 (Propane: 4.8 - 5.1)		
Electrical power consumption max.	W	145		
Electrical power consumption stand by	W	14		
Current	V/Hz	120Vac/60Hz		
Fuse rating	A	5AF & 4AT		
Degree of protection acc. EN 60529		IPX4D (IPX0D in case of room air)		
Weight (empty)	lbs / kg	79 / 36	79 / 36	92 / 42
Water content CH	gallon / liter	0.9 / 3.3	0.9 / 3.2	1.3 / 4.8
After run time pump CH	min	5		
P_{MS} Water pressure min.-max.	PSI / bar	14 - 45 / 1 - 3		
Supply temperature max.	°F / °C	176 / 80		
Pump type		UPER20-58	UPER20-58	UPER20-78
Available pump height CH	PSI / kPa	5.8 / 40	4.3 / 29	5.4 / 37
	Foot of head	13.3	9.9	12.5
Approvals		ASME, CSA		
CSA number		2183087		
CRN number		8101.7CL		

Technical specifications Table 4

6 Connecting the boiler

The boiler has the following pipe connection;

- The central heating circuit pipes.
- The gas supply pipe.
  Provided with a 3/4" male thread. See further chapter 6.4;
- The condensation drain pipe.
  It consists of an oval 7/8" (22 mm) plastic pipe. The drain pipe can be connected to this by means of an open connection. If the open connection is fitted in a different location, then the pipe can be lengthened by means of a 1 1/4" (32 mm) PVC sleeve. See further chapter 6.5;
- The vent system and air supply system.
  It consists of a twin pipe connection that will accept 80mm flue and intake air or with the use of the included adapters 3" PVC/CPVC flue and intake. See further chapter 6.6.

NOTICE

The pipes to be connected to the boiler must be cleaned before connecting in order to prevent dirt from entering and damaging the boiler.

Compression fittings.

Parts:

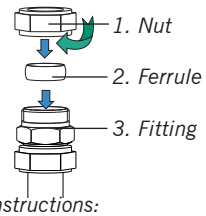

Fitting instructions:

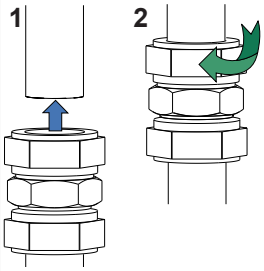

NOTICE

Clean pipe ends thoroughly. The outside surface has to be smooth before fitting.

1. *Push the complete fitting over the pipe as far as possible. Ferrule should be over the pipe completely.*
2. *Turn the nut handtight clockwise.*
3. *Use 2 wrenches, one to hold the fitting on its place, the other for tighten the nut clockwise in 3/4 turn.*

6.1 Central heating system

Connect the central heating system according to its instructions.

NOTICE

When removing the plastic sealing caps from the pipes, water may come out of the boiler due to live fire testing during manufacturing.

NOTICE

The boiler, when used in connection with a refrigeration system, must be installed so the chilled medium is piped in parallel with the boiler with appropriate valves to prevent the chilled medium from entering the boiler.

NOTICE

The boiler piping system of a hot water boiler connected to heating coils located in air handling units where they may be exposed to refrigerated air circulation must be equipped with flow control valves or other automatic means to prevent gravity circulation of the boiler water during the cooling cycle.

NOTICE

Some installations with multiple zone valves may require a differential bypass, this will prevent excessively high flow rates through a single zone when the other zone valves are closed.

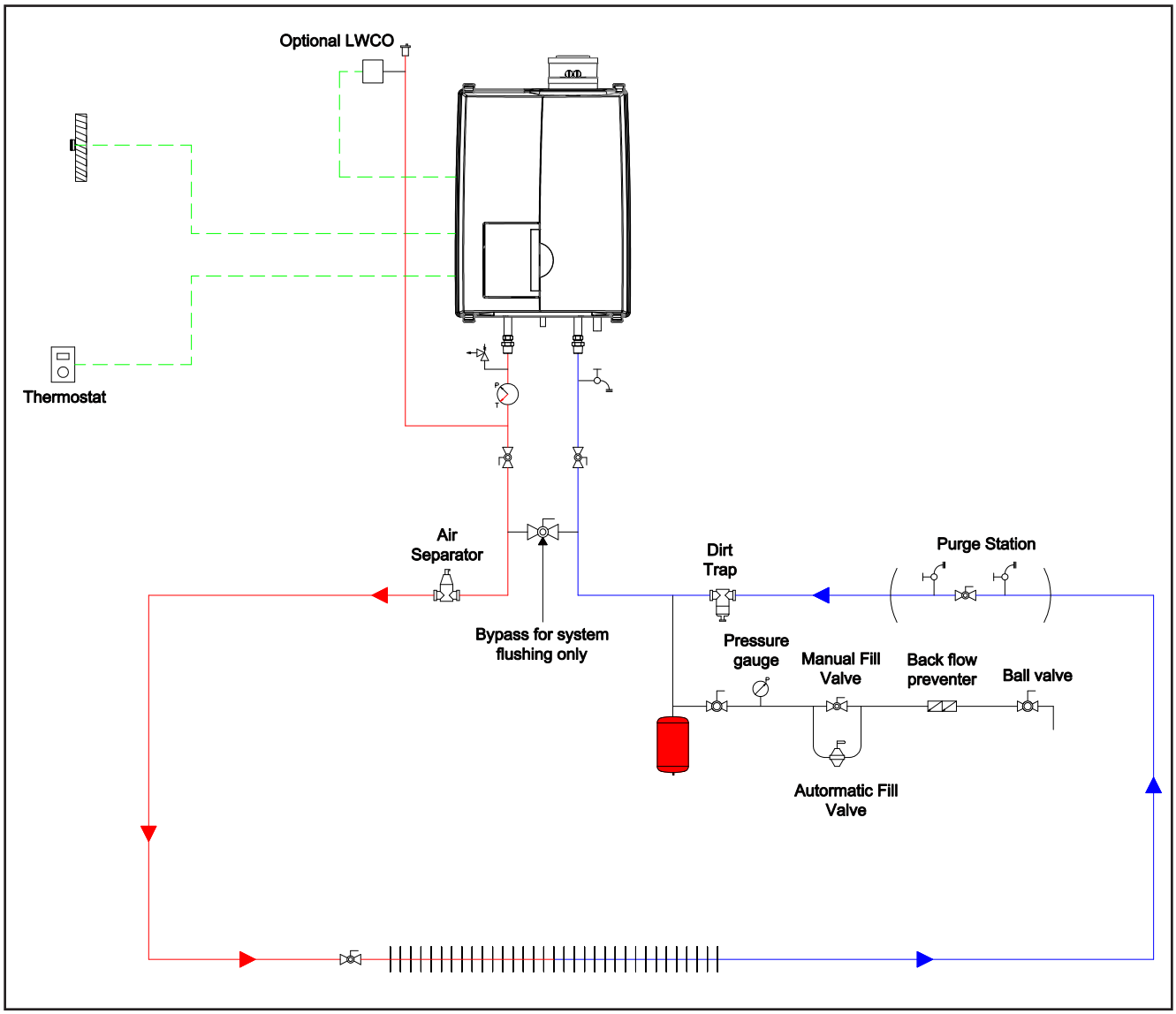

Boiler basic piping *fig. 5*

- Boiler system flushing (Not Boiler heat exchanger)

When replacing an existing boiler the heating system shall be flushed with an approved system cleaner (refer to system cleaner list) before the new boiler is added to the system. If the old boiler has already been removed a bypass must be piped in when the new boiler is installed in order to facilitate the flushing of the system.

The boiler must be valved off from the system, while the system is flushed. No system cleaner should ever enter the boiler heat exchanger due to its caustic nature which could damage the heat exchanger.

1. Close the shutoff valves on both the supply and return connections on the plumbing kit (V1 and V2).
2. Open the bypass valve (V4).
3. Connect pump outlet hose (H1) to the purge station (BD1) and connect H2 to the inlet of the pump and place the other end in the pail.
4. Connect drain hose (H3) to the return side purge station (BD2).
5. Pour the system cleaner into a pail and follow the system cleaner instructions on circulation time and volume to be added to the system.
6. Close the valve (V3)
7. Operate the pump (P1) and circulate the cleaner through the system for required time as established by the cleaner manufacturer.
8. Once the time required by the system cleaner manufacturer has been met place the hose (H3) in a drain.
9. Close the purge station (BD1)
10. Open the auto feed on the system (F1) and allow water to rinse the system for whichever is greater; 10 minutes or the required rinse time by the system cleaner

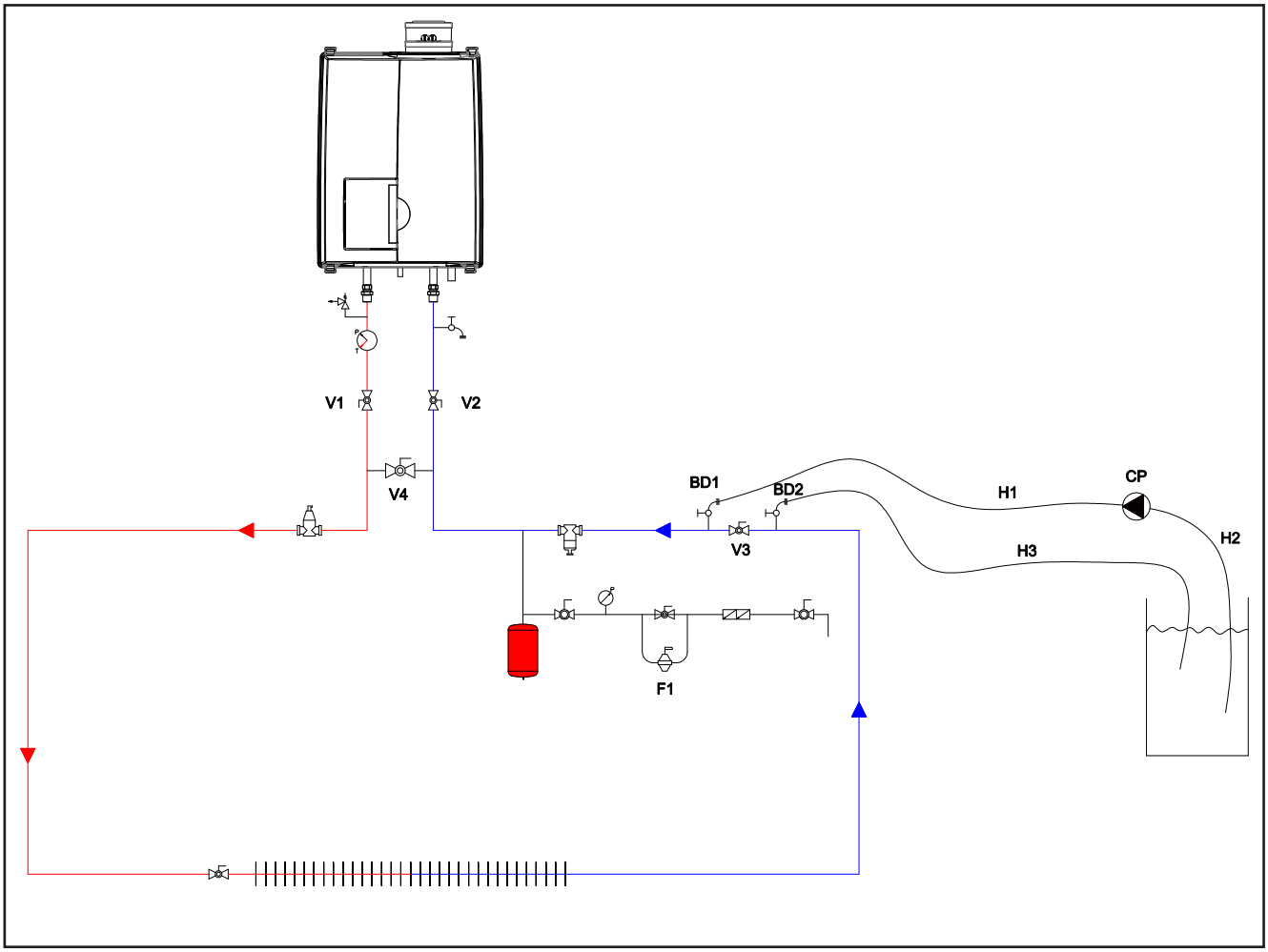

Boiler system flushing *fig. 7*

manufacturer.

11. If the installation is a zone system be sure to purge out each zone individually
12. Close the auto feed on the system (F1)
13. Close the return side purge station (BD2) and disconnect the hose (H3).
14. Open the main valve on the system return (V3)
15. Close the bypass valve below the boiler (V4).
16. Open shutoff valves on both the supply and return connections below the boiler (V1 and V2).
17. Clean out the dirt trap
18. Test the pH of the water that will be used for filling the system
19. Test the water hardness of the water that will be used for filling the system
20. Use the proper water treatment to ensure the pH and water hardness are within the Rinnai boiler water quality guidelines
21. The boiler and system may now be filled.

NOTICE

The following is a list of approved system cleaners, inhibitors, and antifreeze.

Approved antifreeze:

- Rhomar RhoGard Mutli-Metal (AL safe)
- Noble Noburst AL
- Sentinel X500
- Fernox Alphi 11

Approved system cleaner:

- Noble Noburst Hydronic System Cleaner
- Rhomar Hydro-Solv 9100
- Fernox F3 Cleaner
- Sentinel X400

The system cleaners from NoBurst, Rhomar, and Fernox are NOT to be used in the boiler. The boiler must be closed off (valved off) from the rest of the system or not connected while the cleaners are in the system. The system should then be drained and then thoroughly flushed with clean water to remove all the system cleaner.

Approved inhibitors:

- Rhomar Pro-tek 922
- Noble Noburst AL inhibitor
- Sentinel X100

- Connect the expansion tank to the system. See chapter 6.2.
- Connect the pipes so that they are free from strain.

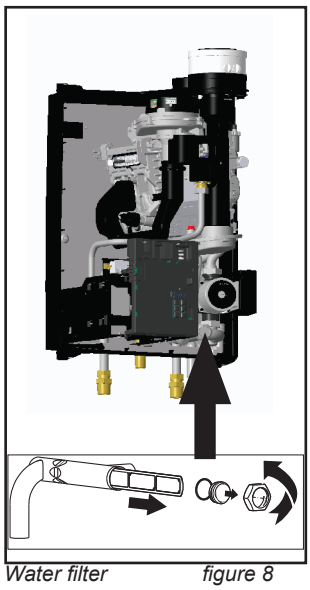

Water filter *figure 8*

The boiler has a self-adjusting and self-protecting control system for the load and the pump capacity. By this means, the temperature difference between the supply and return water is checked and controlled.

If the installation resistance is over the stated value; the load will be adjusted until an acceptable temperature difference between supply and return water has been obtained. If, after this, the temperature difference is still not acceptable then the boiler will switch off and wait until an acceptable temperature has arisen.
If an unacceptable temperature is detected, the control will repeatedly try to achieve water flow over the boiler. If not the boiler will switch off.

As standard the boiler is provided with a water filter in the return pipe of the boiler, so that debris from the central heating water is prevented from affecting the boiler.

NOTICE

To protect the entire heating system we recommend installing a dirt particle trap in the return circuit. When the boiler is installed to an existing heating system this trap is required. Use of a Y strainer is not permitted as substitute for a dirt trap.

- Position H3 (figure 7) is a garden hose thread boiler drain, that can be used to drain the boiler or add water treatment additives to the system, such as inhibitors or glycol.
- For information on locating the expansion tank and system fill, please see the Rinnai Boiler Applications Manual.

NOTICE

The boiler is designed to be used on pressurized heating systems only (closed loop).

If the boiler is to be installed in a system that utilizes zone pumps and not zone valves a low loss header plumbing kit should also be installed (part number: 804000061).

If the pressure drop in the loop/system is greater than the available head pressure from the boiler pump a low loss header plumbing kit should be used (part number: 804000061).

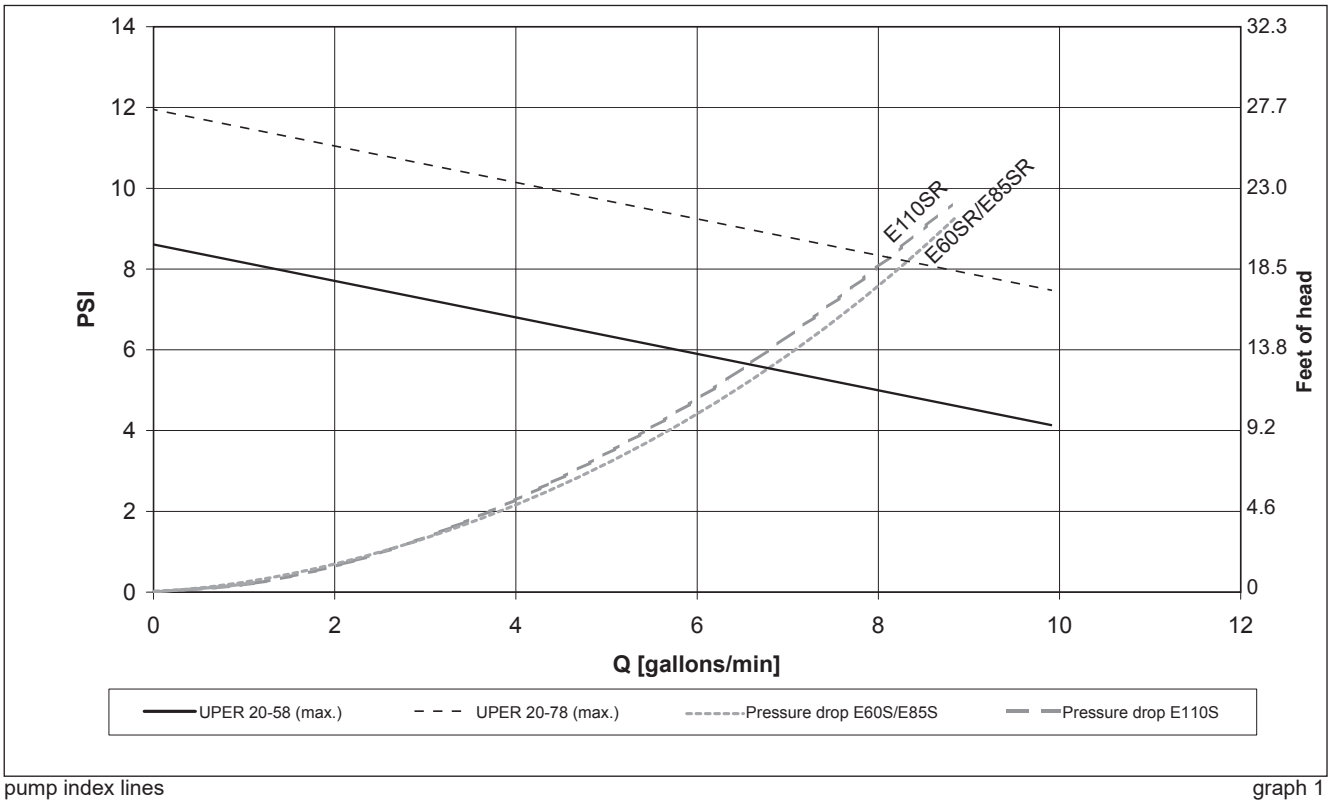

pump index lines graph 1

Boiler type		pump type	water flow rate		permissible installation resistance
			gallons/min.	gallons/h.	PSI / kPa / Foot of head
System	E60SRN/E60SRP	UPER20-58	3.0	180	5.8 / 40 / 13.3
	E85SRN/E85SRP	UPER20-58	4.3	255	4.3 / 29 / 9.9
	E110SRN/E110SRP	UPER20-78	5.5	328	5.4 / 37 / 12.5

pump capacity table 5

6.1.1 Safety valve

NOTICE

An ASME 30 psi pressure relief valve is included with the boiler and must be fitted before any shut off valve in the system.

6.1.2 Low water cut off

NOTICE

The Rinnai E boiler has a factory installed pressure sensor type Low Water Cut Off (LWCO). Check your local codes to see if a Low Water Cut Off is required (LWCO) and if this device conforms to local code.

The boiler's internal low water cut off is not serviceable or adjustable .

6.2 Boiler expansion tank

Choose an expansion tank volume, of which is geared to the installation's water capacity. The pre-charge pressure depends on the installation height above the expansion tank. Fit the expansion tank into the return pipe as close as possible to the boiler return connection. The expansion tank should be sourced locally. Please refer to the expansion tank manufacturer for further information.

NOTICE

Fill the expansion tank to a minimum of 14.5 psi.

NOTICE

The boiler cannot be used with an open type expansion tank.

6.3 Underfloor heating system (plastic pipes)

When using oxygen-permeable tubing, e. g. for underfloor heating systems, the system must be separated using plate heat exchangers.

NOTICE

No recourse can be made to the terms of the limited warranty in the event of failure to observe the regulations pertaining to plastic underfloor heating pipes.

6.4 Gas supply connection

DANGER

Only work on gas lines if you are licensed for such work.
If these instructions are not followed exactly, a fire or explosion may result causing property damage, personal injury or death.

WARNING

Rinnai wall mounted E boilers are built to run on their specified gas type either Natural Gas or Liquid Propane. The gas type the boiler is suitable for is indicated on the packaging and on the boiler by a blue label with Natural Gas (green label with Propane gas) and on the identification plate on the boiler.
First check the identification plate on the boiler for the suitable gas type.

DANGER

Do not use the boiler for another type of gas than indicated on the identification plate of the boiler. This will cause improper functioning and can damage the boiler.

Natural gas: resume with chapter 6.4.1
When propane gas is desired, the boiler can be converted to propane gas by means of a conversion kit. Rinnai Part number:
E60SR: 803000016
E85SR: 803000018
E110SR: 803000020

Propane gas: resume with chapter 6.4.2
When natural gas is desired, the boiler can be converted to natural gas by means of a conversion kit. Rinnai Part number:
E60SR: 803000017
E85SR: 803000018
E110SR: 803000021.

6.4.1 Gas connection with natural gas

NOTICE

The gas supply connection must comply with local regulations or, if such regulations do not exist, with the National Fuel Gas Code, ANSI Z 223.1.

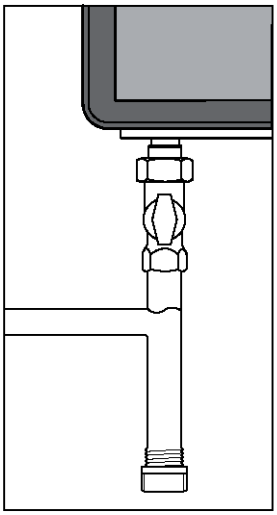

Sediment trap figure 10

Pipe sizing for natural gas
Contact gas supplier to size the gas supply line and meter.

Gas piping
A sediment trap must be installed upstream of the boiler.

The boiler gas pipe is equipped with external 3/4" M-NPT thread. Use appropriate sealing.

The connection to the boiler must include a suitable method of disconnection and a gas control valve must be installed adjacent to the boiler for isolation purposes. The nominal inlet gas pressure measured at the boiler should be 7" W.C. (18 mbar) for Natural gas (Gas A). Maximum pressure with no flow (lockup) or with the boiler running is 10.5 inches W.C. Minimum pressure with the gas flowing (verify during boiler startup) is 4.0 inches W.C.

The gas pipe must be properly supported and connected to the boiler.

NOTICE

Make sure that the gas pipe system does not contain dirt, particularly with new pipes.

DANGER

Always check the safety of the gas pipe system by means of a bubble test using leak-search spray.

NOTICE

The boiler must be isolated from the gas supply piping system by closing its individual manual shutoff valve during any pressure testing of the gas supply piping system at test pressures equal to or greater than 1/2 PSI (3.5 kPa).

6.4.2 Gas connection with propane gas

NOTICE

The gas supply connection must comply with local regulations or, if such regulations do not exist, with the National Fuel Gas Code, ANSI Z 223.1.
For Canada, the gas connection must comply with local regulations or, if such regulations do not exist, with the CAN/CSA B149.1, Natural Gas and Propane Installation Code.

Pipe sizing for propane gas
- Contact gas supplier to size pipes, tanks, and gas pressure regulator.

Propane Supply Pressure Requirements
- Adjust propane supply regulator provided by the gas supplier for 14 inches W.C. maximum pressure.
- Pressure required at gas valve inlet pressure port:
  - Maximum 13.5 inches W.C. with no flow (lockup) or with boiler running.
  - Minimum 8 inches W.C. with gas flowing (verify during boiler startup).

DANGER

Ensure that the high gas pressure regulator is installed at least 6 to 10 feet upstream of the boiler.

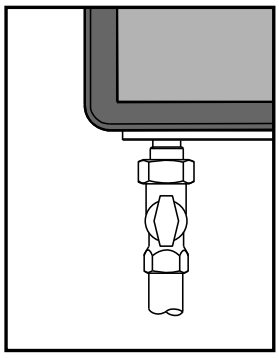

Gas shut off valve onto boiler figure 10a

Gas piping
- A sediment trap must be provided upstream of the gas shut off valve.

The boiler pipe is equipped with external 3/4" M-NPT thread. Use appropriate sealing.

The connection to the boiler must include a suitable method of disconnection. A gas shut off valve must be installed adjacent to the boiler for isolation purposes. The nominal inlet working gas pressure measured at the boiler should be 11 inch W.C. for Propane gas.

The gas pipe must be properly supported and connected to the boiler.

NOTICE

Make sure that the gas pipe system does not contain dirt, particularly with new pipes.

DANGER

Always check the safety of the gas pipe system by means of a bubble test using leak-search spray.

NOTICE

The boiler must be isolated from the gas supply piping system by closing its individual manual shutoff valve during any pressure testing of the gas supply piping system at test pressures equal to or greater than 1/2 PSI (3.5 kPa).

6.5 Condensate drain pipe

This boiler produces condensate. Condensate must be drained otherwise the boiler will not function and can cause product or property damage.

The condensation drain pipe should be connected to a drain in the building by means of an open connection. By this means the possibility of drain gases effecting the boiler is prevented. The drain connection should have a minimum diameter of 1.25" / 32mm.

Install the condensation drain pipe according to applicable local code.

If the condensate outlet of the boiler is lower than the public sewage system a condensate pump must be used.
The condensate produced by the boiler has a pH value between 3 and 4.
Install a neutralization unit if required by local code. It is recommended, but not required to install a condensate neutralizer. Rinnai offers a condensate neutralizer designed to work with all boiler models. The condensate neutralizer kit comes with all the necessary fittings and mounting material. PVC pipe must be supplied by the installation contractor.
Rinnai part number: 804000074

NOTICE

Do not drain the condensation water to the external rain gutter because of the danger of freezing and blockage of the drain.

NOTICE

Before putting the boiler into operation fill the condensate trap with 1.27 cups / 300 ml of water. If the boiler will be installed in a high temperature installation such as baseboard with a supply temperature of 160°F or above, fill the condensate trap with mineral oil instead of water.

NOTICE

Use materials approved by the authority having jurisdiction. In absence of such authority, PVC and CPVC pipe must comply with ASTM D1785, F441 or D2665. Cement and primer must comply with ASTM D2564 or F493.

NOTICE

Periodic cleaning of the condensate disposal system must be carried out. See the Rinnai Boiler Application Manual for further information and for a piping diagram for the condensate.

6.6 Vent system and air supply system

Provisions for combustion and ventilation air must be made in accordance with section, Air for Combustion and Ventilation of the National Flue Gas Code, ANSI Z223.1, or applicable provisions of the local building codes.

- Do not store chemicals near the boiler or in rooms where the air is being supplied to the boiler. **See the list on page 10.**
- Do not allow the flue gases of other appliances to enter the boiler.
- Keep cabinet free of moisture

NOTICE

In the event that the system has actuated to shut off the main burner gas, do not attempt to place the boiler in operation. Contact a qualified service agency.

6.6.1 Intake / Exhaust Guidelines

Refer to the specific instructions on your vent product for additional installation requirements.

- For direct vent boilers, proper reassembly and resealing of the vent-air intake system is required.
- You must use vent components that are certified and listed with this model.
- Do not combine vent components from different manufacturers.
- Venting should be as direct as possible with a minimum number of pipe fittings.
- Avoid dips or sags in horizontal vent runs by installing supports per the vent manufacturer’s instructions.
- Support horizontal vent runs every four feet and all vertical vent runs every six feet or in accordance with local codes.
- Vent diameter may be reduced to 2" (see table 9).
- The boiler is unsuitable to install on a common vent installation, see also chapter 18.
- Do not connect the venting system with an existing vent or chimney.
- Do not common vent with the vent pipe of any other boiler or appliance.
- Vent connections must be firmly pressed together so that the gaskets form an air tight seal.
- Refer to the instructions of the vent system manufacturer for component assembly instructions.
- If the vent system is to be enclosed, it is suggested that the design of the enclosure shall permit inspection of the vent system. The design of such enclosure shall be deemed acceptable by the installer or the local inspector.

NOTICE

If it becomes necessary to access an enclosed vent system for service or repairs, Rinnai is not responsible for any costs or difficulties in accessing the vent system. The limited warranty does not cover obtaining access to an enclosed vent system.
The instructions for the installations of the venting system shall specify that the horizontal portions of the venting system shall be supported to prevent sagging; the methods of and intervals for support shall be specified. These instructions shall also specify that the venting system:

- **For category I, II and IV boilers, have horizontal runs sloping upwards not less than 1/4" per foot (21mm/m) from the boiler to the vent terminal;**
- **For category III boilers, slope shall be as specified in the boiler manufacturer's instructions;**
- **For category II and IV boilers, be installed so as to prevent accumulation of condensate; and**
- **For category II and IV boilers, where necessary, have means provided for drainage of condensate.**

NOTICE

Les instructions d'installation du système d'évacuation doivent préciser que les sections horizontales doivent être supportées pour prévenir le fl échissement. Les méthodes et les intervalles de support doivent être spécifi és. Les instructions doivent aussi indiquer que le système d'évacuation:

- **pour les chaudières de catégories I, II et IV doit présenter des tronçons horizontaux dont la pente montante est d'au moins 1/4" par pied (21mm/m) entre la chaudière et le terminal de l'évacuation;**
- **pour les chaudières de catégories III, la pente sera spécifi ée dans les instructions du fabricant de la chaudière;**
- **pour les chaudières de catégories II et IV, doit être installé de façon à empêcher l'accumulation de condensats; et**
- **pour les chaudières de catégories II et IV, doit être prévu où nécessaire, de dispositifs d'évacuation des condensats.**

6.6.2a Examples vent and air supply systems (parallel)

Wall thickness for vent termination installation:
Minimum: 100mm / 4”
Maximum: 508mm / 20”

Examples sealed combustions

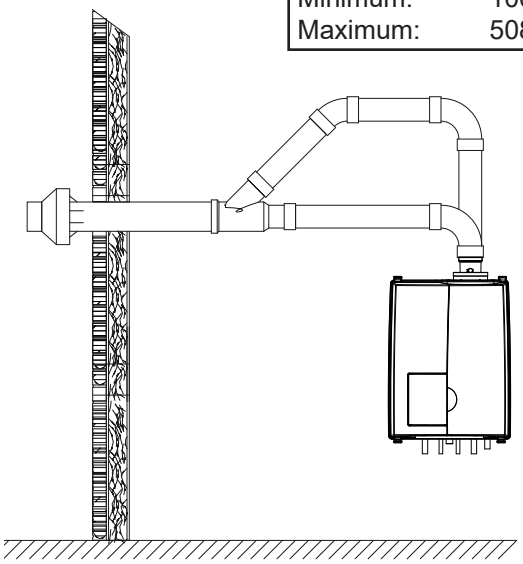

Horizontal with concentric termination figure 12A

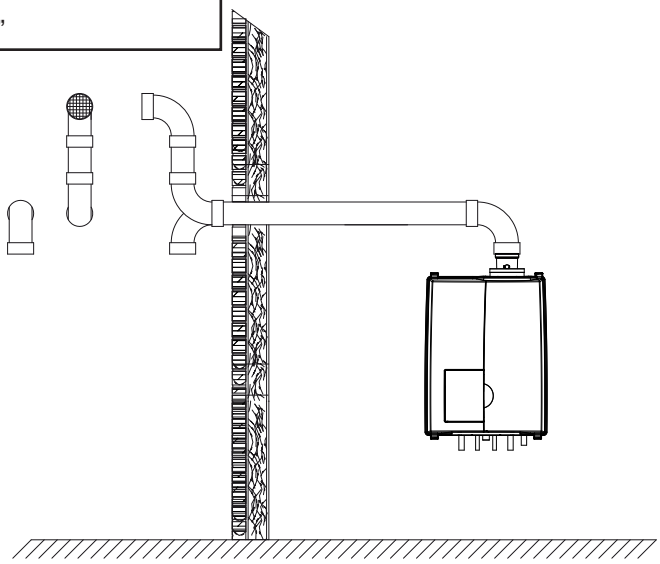

Horizontal with parallel termination figure 12B

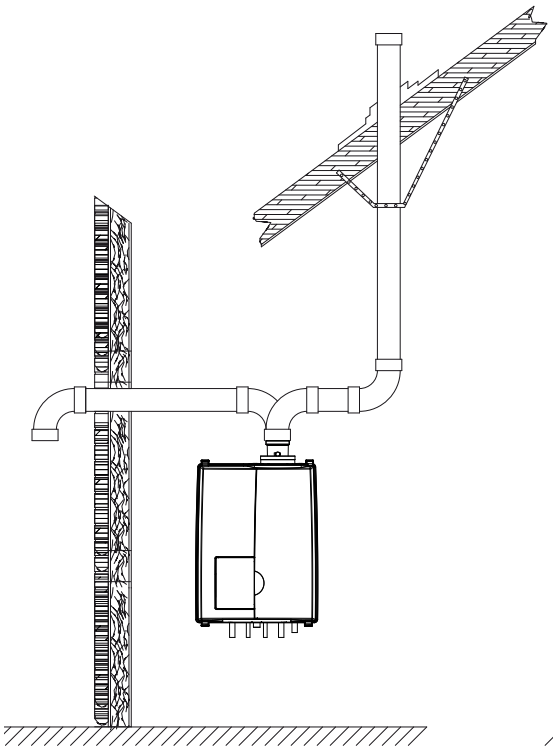

Vertical vent and horizontal air intake figure 12C

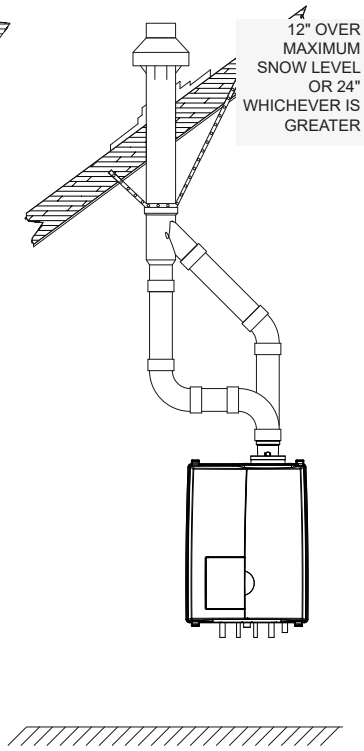

Vertical with concentric termination figure 12D

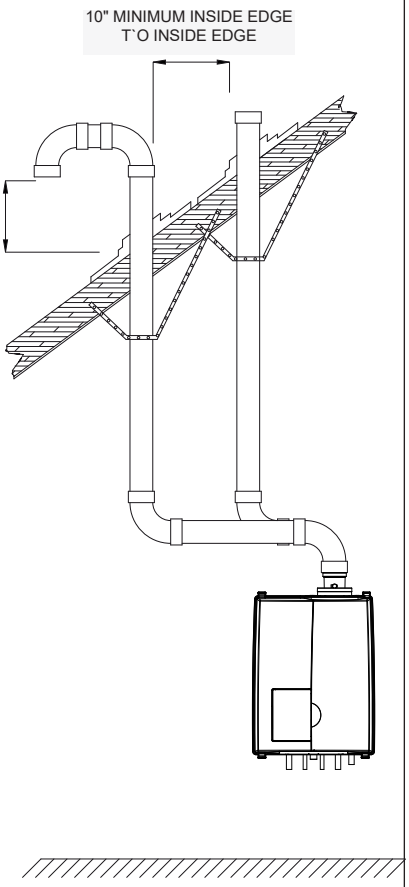

Vertical with parallel termination figure 12E

6.6.2b Examples vent and air supply systems (concentric)

Wall thickness for vent termination installation:
Minimum: 100mm / 4”
Maximum: 508mm / 20”

Examples wall terminals

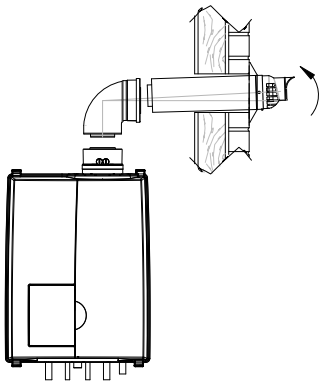

Short termination with wall terminal
figure 13A

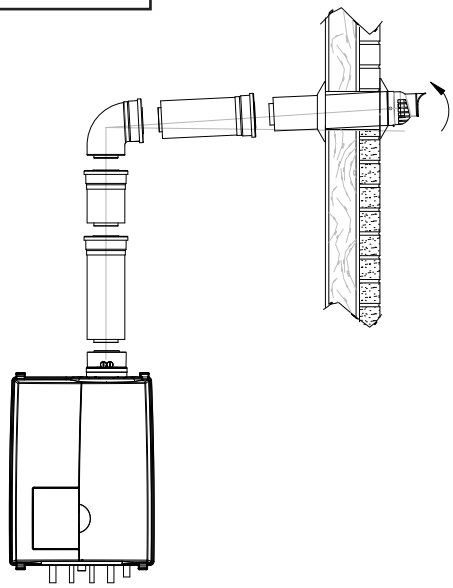

Termination with wall terminal on higher level
figure 13B

Examples roof terminals

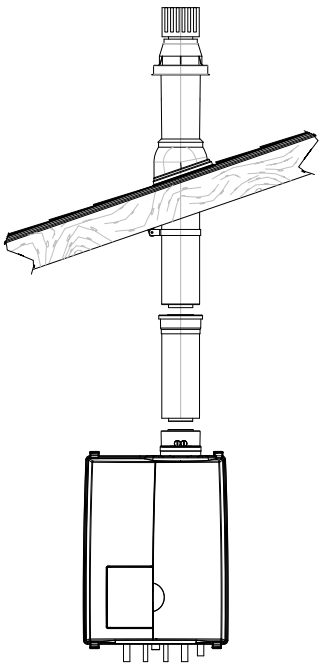

Short termination with roof terminal
figure 13C

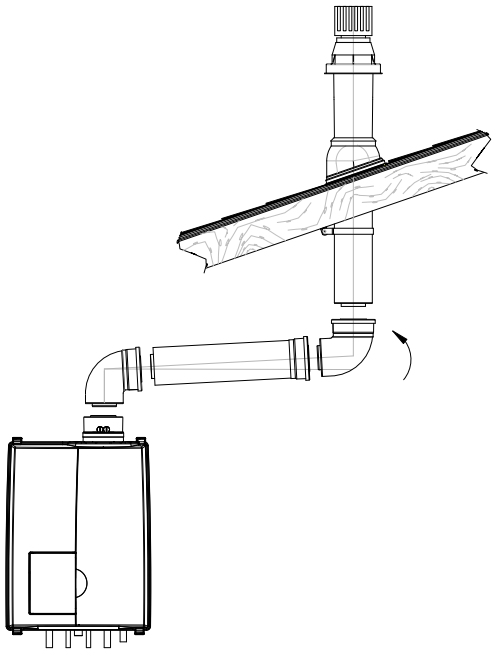

Termination with roof terminal and bends
figure 13D

6.6.2c Examples vent and air supply systems (PP Twin Pipe and Flex)

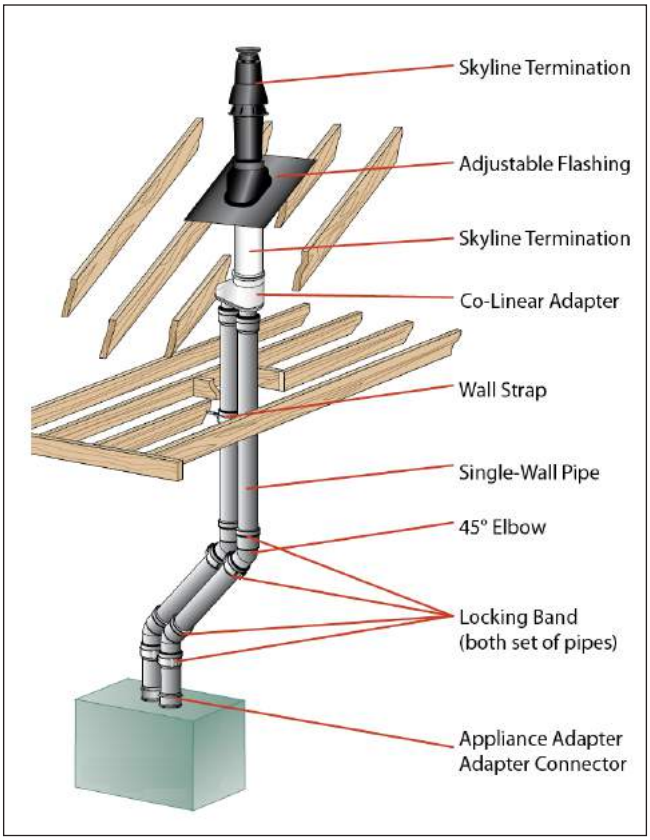

Vertical twin pipe termination figure 13F

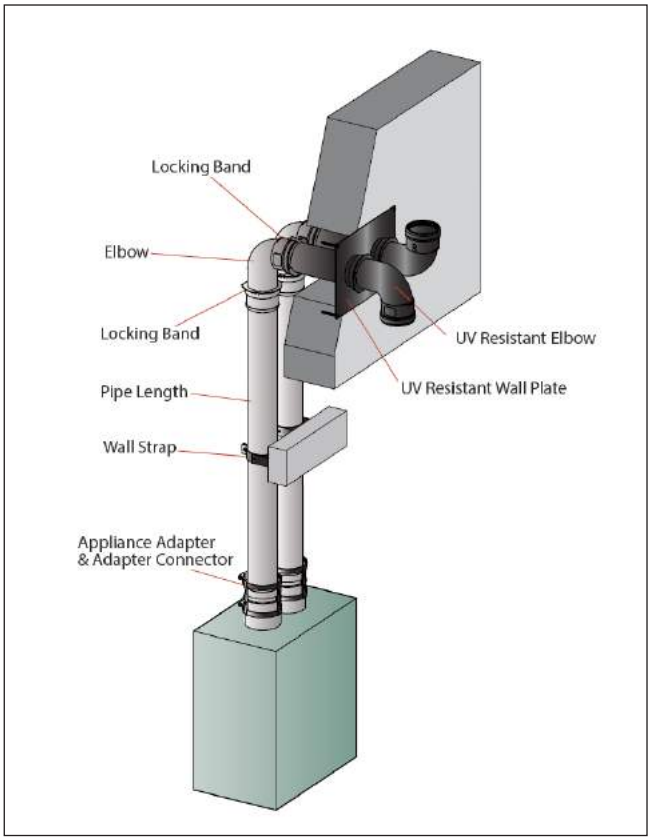

Horizontal twin pipe elbow termination figure 13G

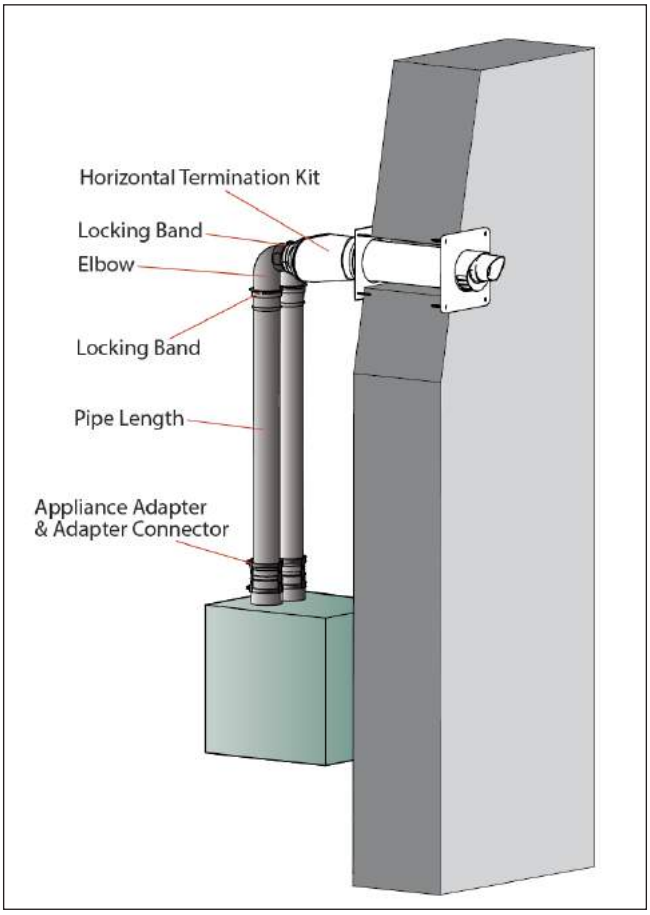

Horizontal twin pipe concentric termination figure 13H

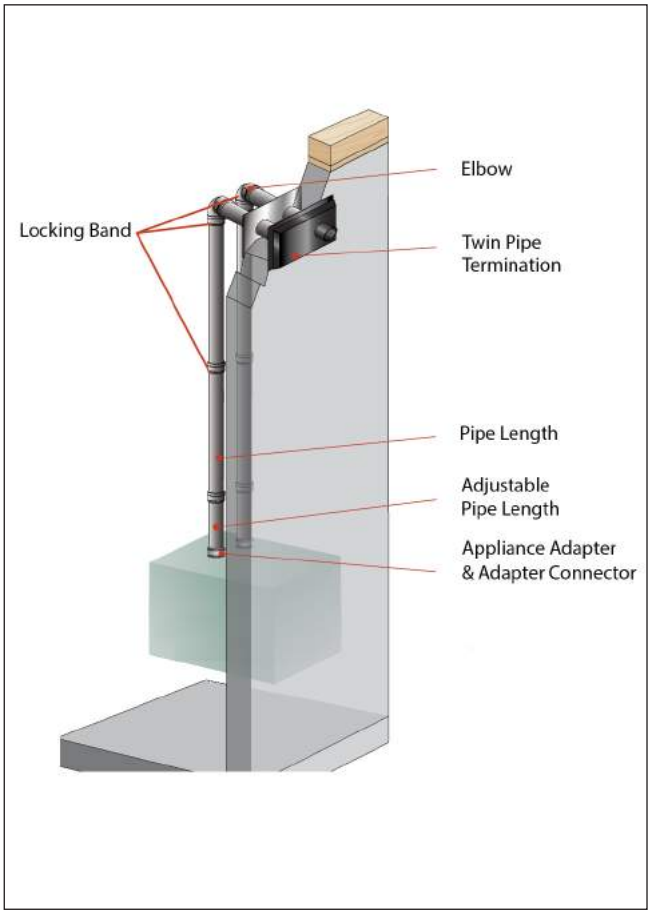

Horizontal twin pipe elbow termination below grade figure 13J

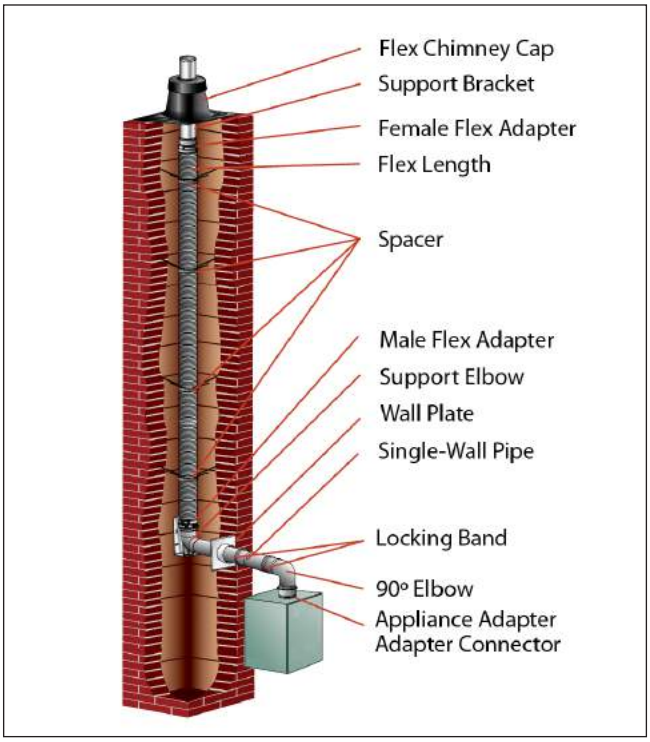

Flex through chimney termination figure 13K

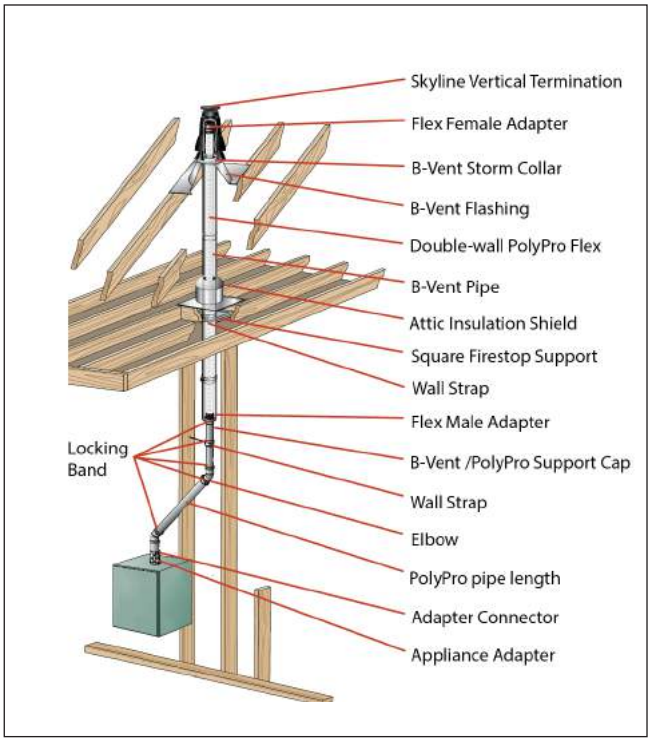

Flex through B vent as a chase termination figure 13L

6.6.2d Boiler Exhaust Vent Hanger and Support (Rigid Pipes)

The purpose of this section is to provide more information about Rinnai's requirement that the vent system installed with the Rinnai boiler must be appropriately supported. As we state elsewhere in this manual, "place pipe supports every 4 feet (1219 mm) of horizontal run, beginning with the support near the boiler to prevent movement in fittings and allow boiler to be free from any strain or weight on boiler or fittings." For Horizontal pipes, the first support should be placed as close as possible after the first elbow. These required vent supports are critical to prevent movement in fittings and to allow the boiler to be free from any strain or weight associated with the installed fittings and/or vent pipe system.

Installation of the venting system MUST comply with the respective vent manufacturer's instructions. Additionally, to ensure structural integrity, the installer MUST select hangers, supports, and restraints which are able to withstand all static and dynamic loading conditions which act upon the vent piping system and the associated Rinnai boiler. Hangers, supports, and restraints shall be 100% corrosion proof, UV resistant, and impact resistant.

Exhaust vent pipe MUST be securely fastened to the structure to avoid movement. The first hanger support MUST be located directly after the first elbow on the first horizontal vent section or as close thereto as possible to ensure no movement. (see example below). Use hangers that will not score or damage vent pipes and are accepted by local codes.

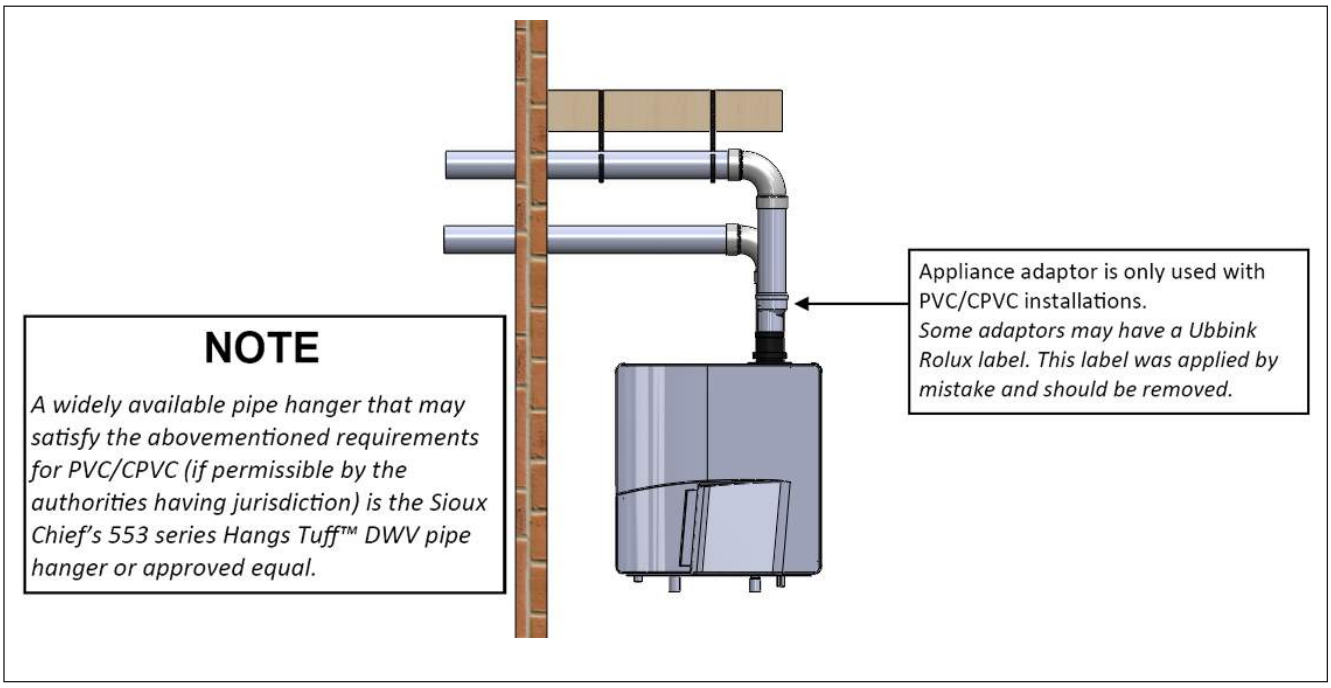

Recommended pipe hanger and support for PVC/CPVC pipes figure 13M

The information provided is an effort to assist you in better understanding the requirements to secure the venting. This document has been compiled from generally accepted engineering principles and standards from the American National Standards Institute and other pertinent documents. The specifications herein are intended as a guide only and it is the responsibility of the engineer/designer or installer to select appropriate support and to use this guide in conjunction with all applicable codes and/or standards.

6.6.3 Installation of the vent system

NOTICE

Consult local and state codes pertaining to special building code and fire department requirements. Adhere to national code requirements.

NOTICE

Follow the listed maximum length of vent systems, which are boiler output dependent. The maximum permissible lengths are listed in table 9, chapter 6.6.6.

Decide how to install the exhaust and air intake system. You can choose between:

- **Parallel system (see chapter 6.6.2a)**

The parallel connection is not provided standard initially on the boiler.
The parallel connection diameter is 2x 3" (80mm). In this case a seperate supplied kit, with 2 vent adapters 3" should be fitted on top of the boiler, to which the venting and air supply system can be fitted, with or without elbow pieces. The maximum permissible pipe length is set out in table 9, chapter 6.7.6.
The boilers are provided standard initially with a concentric connection, but can be converted to a parallel system with supplied adapters.

- **Concentric system (see chapter 6.6.2b)**

The concentric connection is provided standard initially on the boilers.
The boiler connection diameter is concentric 80/125mm) to which the concentric venting and air supply system can be fitted, with or without elbow pieces. The maximum permissible pipe length is set out in table 9, chapter 6.6.6.

- **Room Air System (indoor combustion air)**

The boiler can use room air for combustion. If this option is selected the boiler must be provided with a parallel vent system. A single exhaust pipe can then be fitted. It is required to use a room air filter (Part nr. 808000025) when using indoor air for combustion. See chapter 6.6.3.2 for installation. The maximum permissible pipe length is set out in table 9, chapter 6.6.6.

NOTICE

Rinnai strongly recommends the use of the room air filter when a Room Air System (indoor combustion air) is used.

NOTICE

When the boiler is installed in any of the areas listed in chapter 5.1, "Areas likely to have contaminants" or any area exposed to the contaminants listed in chapter 5.1, then sealed combustion is required.

NOTICE

We advise to install a vent system out of the venting system program supplied by Rinnai (See chapter 18 Parts list Vent system). For further information about the available components of the venting and air supply system we recommend you consult Rinnai and the Installation instructions and parts list documentation.

6.6.3.1 Boiler conversion from concentric to parallel

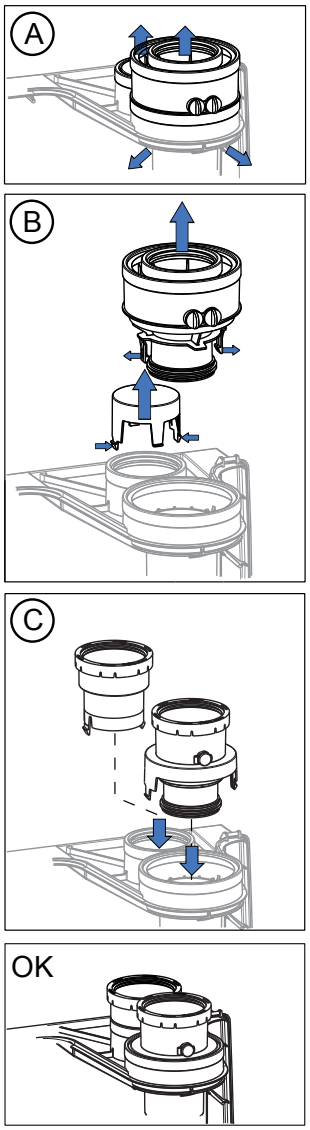

boiler conversion from concentric to parallel
figure 14b

A. 1. Push the 2 clips slightly outwards

B. 2. Pull the concentric adaptor out of the boiler
3. Press the cover in the connection at the back from inside out

C. 4. Push the 3" air intake connector into the connection at the back of the boiler

5. Pull the rubber seal around the bottom of the exhaust connector
6. Push the exhaust connector in the boiler, in the boiler exhaust pipe until 'CLICK'
7. Push the rubber plug in open position in the O_2 measuring opening and close the stop.

D. Connect the parallel vent system.

6.6.3.2 Installing air filter

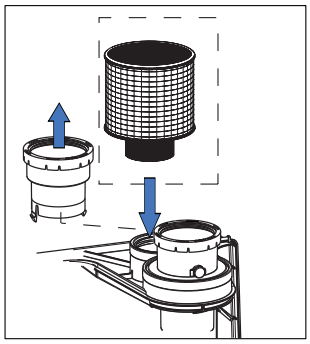

placing air filter on air intake
figure 14c

1. Pull the 3" connections out of air intake of the boiler
2. Push the air filter into the air intake on top of the boiler. See figure 14c.

The equivalent length of the combustion room air filter is 12ft (3.66m).

6.6.4 Vent/air intake terminal position

Terminals should be positioned as to avoid products of combustion entering openings into buildings or other vents.

Maintain 12” of clearance above the highest anticipated snow level or grade or, whichever is greater. Please refer to your local codes for the snow level in your area.

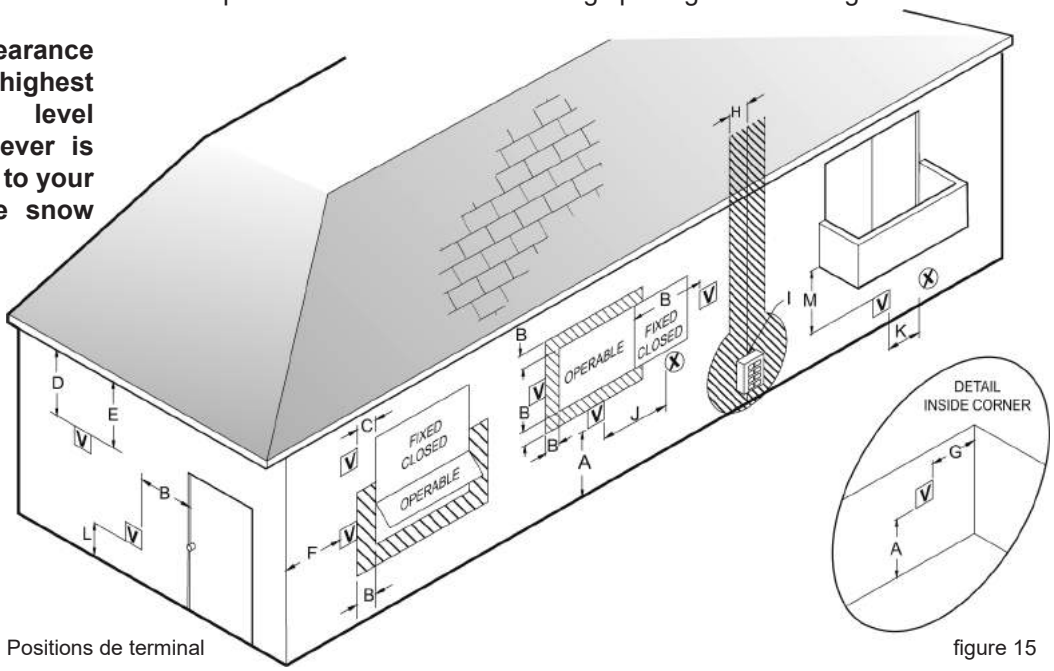

Positions de terminal

figure 15

Ref	Description	Canadian Installations - Direct Vent and non Direct Vent	US Installations Direct Vent	US Installations non Direct Vent
A	Clearance above grade, veranda, porch, deck, or balcony	12 inches (30 cm)	12 inches (30 cm)	12 inches (30 cm)
B	Clearance to window or door that may be opened	6 inches (15 cm) for appliances ≤ 10,000 Btuh (3 kW), 12 inches (30 cm) for appliances > 10,000 Btuh (3 kW) and ≤ 100,000 Btuh (30 kW), 36 inches (91 cm) for appliances > 100,000 Btuh (30 kW)	6 inches (15 cm) for appliances ≤ 10,000 Btuh (3 kW), 9 inches (30 cm) for appliances > 10,000 Btuh (3 kW) and ≤ 50,000 Btuh (30 kW), 12 inches (91 cm) for appliances > 50,000 Btuh (30 kW)	4 feet (1.2 m) below or to side of opening; 1 foot (300 mm) above opening
C	Clearance to permanently closed window	*	*	*
D	Vertical clearance to ventilated soffit, located above the terminal within a horizontal distance of 2 feet (61 cm) from the center line of the terminal	*	*	*
E	Clearance to unventilated soffit	*	*	*
F	Clearance to outside corner	*	*	*
G	Clearance to inside corner	*	*	*
H	Clearance to each side of center line extended above meter/regulator assembly	3 feet (91 cm) within a height 15 feet (4.5 m) above the meter/regulator assembly	*	*
I	Clearance to service regulator vent outlet	36 inches (91 cm)	*	*
J	Clearance to nonmechanical air supply inlet to building or the combustion air inlet to any other appliance	6 inches (15 cm) for appliances ≤ 10,000 Btuh (3 kW), 12 inches (30 cm) for appliances > 10,000 Btuh (3 kW) and ≤ 100,000 Btuh (30 kW), 36 inches (91 cm) for appliances > 100,000 Btuh (30 kW)	6 inches (15 cm) for appliances ≤ 10,000 Btuh (3 kW), 9 inches (30 cm) for appliances > 10,000 Btuh (3 kW) and ≤ 50,000 Btuh (30 kW), 12 inches (91 cm) for appliances > 50,000 Btuh (30 kW)	4 feet (1.2 m) below or to side of opening; 1 foot (300 mm) above opening
K	Clearance to a mechanical air supply inlet	6 feet (1.83 m)	3 feet (91 cm) above if within 10 feet (3 m) horizontally	3 feet (91 cm) above if within 10 feet (3 m) horizontally
L	Clearance above paved sidewalk or paved driveway located on public property	7 feet (2.13 m) [1]	*	7 feet (2.13 m)
M	Clearance under veranda, porch, deck, or balcony	12 inches (30 cm) [2]	*	*

[1] A vent shall not terminate directly above a sidewalk or paved driveway that is located between two single family dwellings and serves both dwellings.
[2] Permitted only if veranda, porch, deck, or balcony is fully open on a minimum of two sides beneath the floor.
* For clearances not specified in ANSI Z223.1/NFPA 54 or CSA B149.1, clearances are in accordance with local installation codes and the requirements of the gas supplier.

clearances of venting system terminals *table 6*

NOTICE — **Terminals should be positioned as to avoid products of combustion entering openings into buildings or other vents.**

CAUTION — **Maintain 12” of clearance above the highest anticipated snow level or grade or, whichever is greater. Please refer to your local codes for the snow level in your area.**

CAUTION — **The termination shall be at least 4 feet (1,220 mm) distance from electric meters, gas meters, regulators and relief equipment. (for room air application only)**

NOTICE — **Horizontal vent systems should always be installed sloping towards the boiler (min. 21 mm/m, 1/4”/ feet), in order to avoid condensate retaining in the vent system. With the condensate running back to the boiler the risk of ice forming at the terminal is reduced.**

NOTICE — **The whole route of the exhaust vent system must be installed upwards, never downwards, completely nor partly.**

NOTICE — **Place pipe supports every 4 feet (1219 mm) of horizontal run, beginning with the support near the boiler to prevent movement in fittings and allow boiler to be free from any strain or weight on boiler or fittings.**

NOTICE — **The terminal should be located where dispersal of combustion products is not impeded and with due regard for the damage or discoloration that might occur to building products or vegetation in the vicinity (see fig 15 and 16).**

NOTICE — **In certain weather conditions condensation may also accumulate on the outside of the air inlet pipe. Such conditions must be considered and where necessary insulation of the inlet pipe may be required.**
In cold and/or humid weather water vapor may condense on leaving the vent terminal. The effect of such ‘water condensation’ must be considered. The terminal must be located in a place not likely to cause a nuisance.

NOTICE — **Cellular or Foam core PVC, CPVC and Radel is not permitted for use with the boiler.**

NOTICE — **The application of any type of insulation is prohibited for use with any Plastic venting system.**

		Approval Codes for Installation	
Item Description	**Flue Material**	**United States**	**Canada**
Plastic Vent and/or air pipes and fittings	PVC Schedule 40	ANSI/ASTM D1785	ULC S636
	PVC - DWV	ANSI/ASTM D2665	
	CPVC Schedule 40	ANSI/ASTM F441	
Plastic Pipe cement and primer	PVC	ANSI/ASTM D2564	
	CPVC	ANSI/ASTM F493	

Item Description	Flue Material	Manufacturer	Approval code US/CAN	Flue system
Stainless steel vent systems	Stainless Steel	Heat Fab	UL1738 Concentric twin pipe	Saf-T Vent SC Saf-T Vent EZ Seal
Stainless steel vent systems	Stainless Steel	Simpson Dura-Vent	UL1738 Flexible liner UL1738 Concentric twin pipe	FastNSeal Flex FastNSeal
Stainless steel vent systems	Stainless Steel	Ubbink		Rolux Condensing Vent System
Plastic Vent System	PP	Ubbink	ULC S636	Rolux Condensing Vent System
Plastic Vent System	PVC/CPVC	Various	ULC S636	System 636
Plastic Vent System	PPS	Centrotherm	ULC S636 and UL 1738	Innoflue
Plastic Vent System	PP	Dura-Vent	ULC S636	Poly Pro & Poly Pro Flex

Approval codes for installation of venting system *table 7*

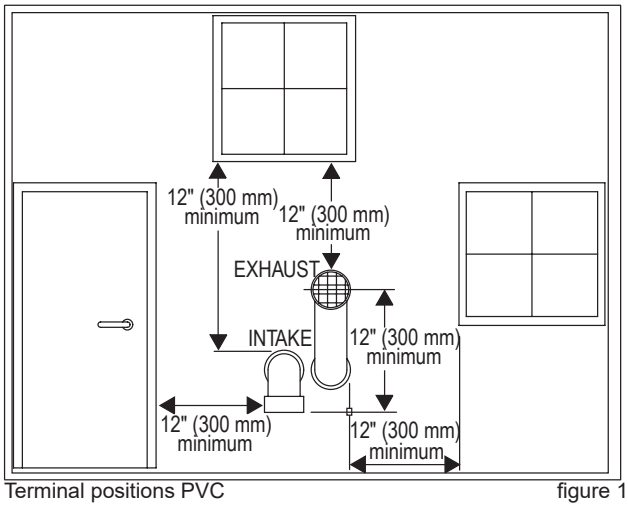

Terminal positions PVC figure 16

6.6.5 Direct vent closet and alcove installation

WARNING

For closet and alcove installation, CPVC material, instead of PVC, must be used in a closet/alcove structure. Failure to follow this warning could result in fire, personal injury, or death.

Rinnai strongly suggests the use of PPs venting for all closet and alcove installations. For non direct vent room air applications see sections 6.6.5 and 6.6.8.

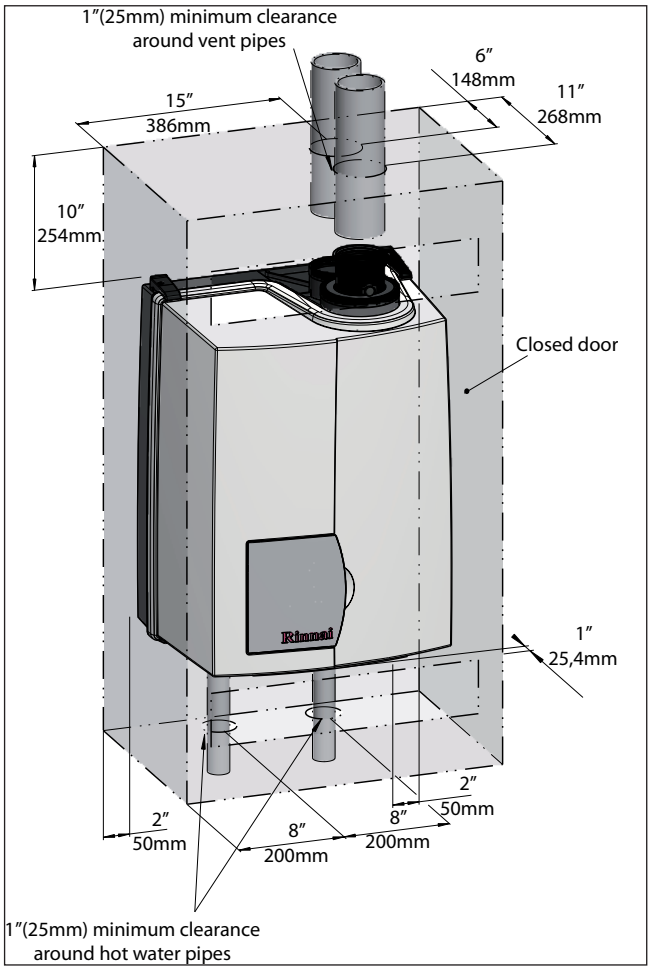

Closet installation *figure 17*

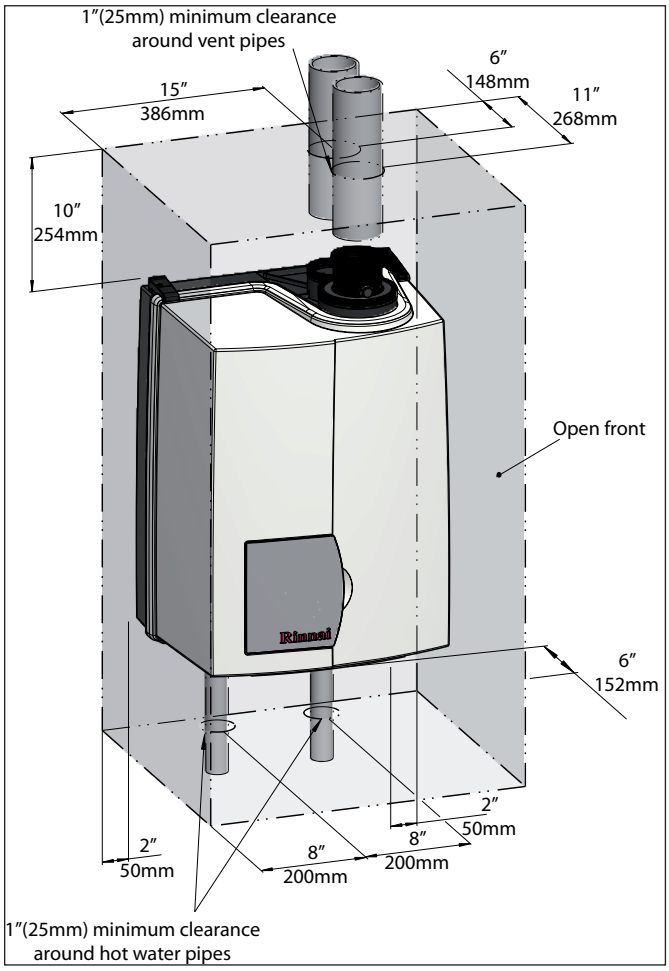

Alcove installation *figure 18*

6.6.6 Dimensioning of the exhaust and air intake duct

DANGER

The wall mounted boiler must be vented and supplied with combustion and ventilation air as described in this section.
Ensure the vent and air piping and the combustion air supply comply with these instructions regarding vent system, air system, and combustion air quality.

Inspect finished vent and air piping thoroughly to ensure all are airtight and comply with the instructions provided and with all requirements of applicable codes.

Failure to provide a properly installed vent and air system may cause severe personal injury or death.

WARNING

Use only the material listed in Rinnai's vent documentation for vent pipe, and fittings. Failure to comply could result in severe personal injury, death or substantial property damage.

NOTICE

Installation must comply with local requirements and with the National Fuel Gas Code, ANSI Z223.1.

WARNING

For closet and alcove installation, CPVC material (instead of PVC) must be used in a closet/alcove structure. Failure to follow this warning could result in fire, personal injury, or death.

NOTICE

All vent pipes must be connected and properly supported, and the exhaust must be pitched a minimum of a 1/4”/foot (21 mm/m) back to the boiler (to allow drainage of condensate). Please refer to the venting manufacturer's manual to see if a larger pitch is required for specific venting systems. The venting system manufacturer's required venting pitch must always be followed if larger than 1/4” (21 mm).

NOTICE

Combustion air piping from the outside MUST comply to the requirements of the authority having jurisdiction or, in the absence of such requirements, to the latest edition of the National Fuel Gas Code, ANSI Z223.1/NFPA 54.

6.6.7 Combustion air and vent piping lengths.

In the table below you will find the maximum equivalent pipe length of the vent/air system based on 3" diameter. These lengths are for single pipe (room air) and twin pipe and concentric venting systems.

Maximum Equivalent Length (Dimension in Feet) - Model & Vent Type Specific		
Item #	Vent type	E60SR E85SR E110SR
		feet
1	2” PPS Single Pipe (Room Air) & Twin Pipe	40
2	3” PPS Single Pipe (Room Air) & Twin Pipe	100
3	2” PPS Twin Pipe to 2”/4” PPS Cnctrc. Termination	40
4	3” PPS Twin Pipe to 3”/5” PPS Cnctrc. Termination	---
5	3”/5”PP Concentric Pipe	100
6	2” Flex Vent	20
7	3” Flex Vent	50
8	3” PVC/CPVC Single Pipe & Twin Pipe w/or without 3” CVK Termination	100

Equivalent vent length table 8

Fittings or Piping Equivalent PVC	feet	m
45 degree elbow	3	0.91
90 degree elbow	6	1.83
plastic pipe per foot	1	0.30
concentric vent kit	3	0.91

Equivalent friction loss of PVC/CPVC table 9

Centrotherm 3" PPs Equivalent lengths for piping fittings	feet	meters
45 degree elbow	6	1,83
87 degree long elbow	12	3,66
Termination Tee	12	3,66
Twin Pipe to Concentric Adapter	4	1,22
Low profile wall termination	12	3,66
Velocity Cone	12	3,66

Equivalent friction loss of Centrotherm PPC table 9a

Calculation of equivalent length vent system

Choose the vent type and fill out the corresponding table.

* See equivalent length tables above.

Parallel system

Length tube	Number of elbows 90° x 6*	Number of elbows 45° x 3*	Concentric terminal Add 5 ft.*	Total	Multiply with factor	Equivalent length
Combustion air						
ft	ft	ft	ft	ft	0.5	ft
Vent						
ft	ft	ft	ft	ft	0.5	ft
					Total equivalent length	ft

Concentric system

Length concentric tube, boiler to roof horizontal	Number of elbows 90° x 6*	Number of elbows 45° x 3*	Concentric terminal Add 2 ft.*	Total	Multiply with factor	Total equivalent length
ft	ft	ft	ft	ft	1.0	ft

Example of calculation:
Twin tube (parallel) with terminal
Combustion air length : 24 ft with elbow 3 x 90°
Vent length : 24 ft with elbow 2 x 90°, elbow 2 x 45°

Calculation:
Equivalent Air Length : (24+3x6+2) x 0.5 = 22 ft
Equivalent Vent Length : (24+2x6+2x3+2) x 0.5 = 22 ft +Total = 44 ft.

6.6.8 Calculation of compensation factor

The compensation factor eliminates or reduces the natural effect of derate of maximum input caused by the resistance of the vent system and/or the impact of the altitude.

1. Determine the Compensation Factor Vent System CF(V) in the table below.

Eq. length (ft)		Boiler type		
		E60SR	E85SR	E110SR
min	max	CF (V)		
0	10	0	0	0
11	20	0	0	0
21	30	0	0	2
31	40	1	1	4
41	60	2	2	6
61	80	3	3	8
81	100	4	4	10

Compensation factor vent system CP(V) *table 10*

2. Determine the Compensation Factor Altitude CF(A) in the table below.

Altitude (ft)		Boiler type E60SR, E85SR, E110SR
min	max	CF (A)
0	1	0
1,000	2,000	6
2,000	3,000	12
3,000	4,000	18
4,000	5,000	24
5,000	6,000	30
6,000	7,000	36
7,000	8,000	42
8,000	9,000	48
9,000	10,000	54

Compensation factor altitude CP(A) *table 11*

NOTICE

Any application or installation above 10,000 must be reviewed by Rinnai's Engineering group. This is to ensure the product is installed and the overall system is designed properly and that the units are commisioned properly. Not involving of Rinnai's Engineering group would result in no support of the product and no warranty.

3. Calculate the Compensation Factor Total CF(T):

$$CF(T) = CF(V) + CF(A)$$

The result is the setting for Parameter 73.

Change parameter 73 according to this result. See Chapter 10.1 how to change parameters.

Example of calculation:		
E50C		
Eq. lenth vent system (taken from previous example)	44 ft	CF(V) = 2
Altitude	7,200ft	CF(A) = 42 +
		CF(T) = 44
Parameter setting (Par. 73) = 44		

WARNING

Do not overcompensate the boiler by setting a higher value than calculated, otherwise the boiler could be damaged.

6.6.9 Room Air System (indoor combustion air)

When using indoor air, Rinnai strongly recommends the use of an indoor air filter, P/N 808000025.

WARNING

This boiler requires adequate combustion air for ventilation and dilution of flue gases. Failure to provide adequate combustion air can result in unit failure, fire, explosion, serious bodily injury or death. Use the following methods to ensure adequate combustion air is available for correct and safe operation of this boiler.

Important: Combustion air must be free of corrosive chemicals. Do not provide combustion air from corrosive environments. Appliance failure due to corrosive air is not covered by the limited warranty.
Combustion air must be free of acid forming chemicals such as sulfur, fluorine and chlorine. These chemicals have been found to cause rapid damage and decay and can become toxic when used as combustion air in gas appliances. Such chemicals can be found in, but not limited to bleach, ammonia, cat litter, aerosol sprays, cleaning solvents, varnish, paint and air fresheners. Do not store these products or similar products in the vicinity of this boiler.

Unconfined Space:
An unconfined space is defined in NFPA #54 "as a space whose volume is not less than 50 cubic feet per 1000 Btu/hr (4.8 m3 per kW per hour) of the aggregate input rating of all appliances installed in that space. Rooms communicating directly with the space in which the appliances are installed, through openings not furnished with doors, are considered a part of the unconfined space." If the “unconfined space” containing the appliance(s) is in a building with tight construction, outside air may still be required for proper operation. Outside air openings should be sized the same as for a confined space.

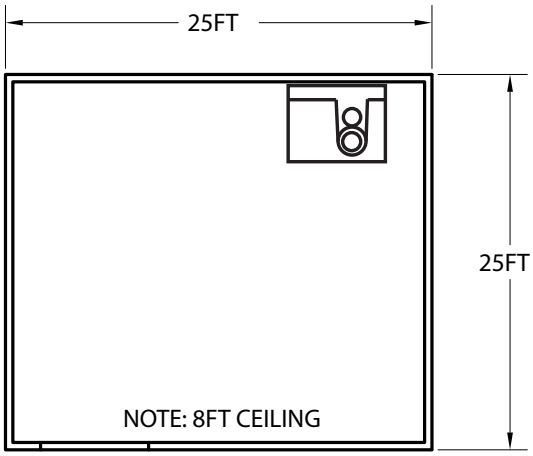

Unconfined Space

91,300 BTU Boiler

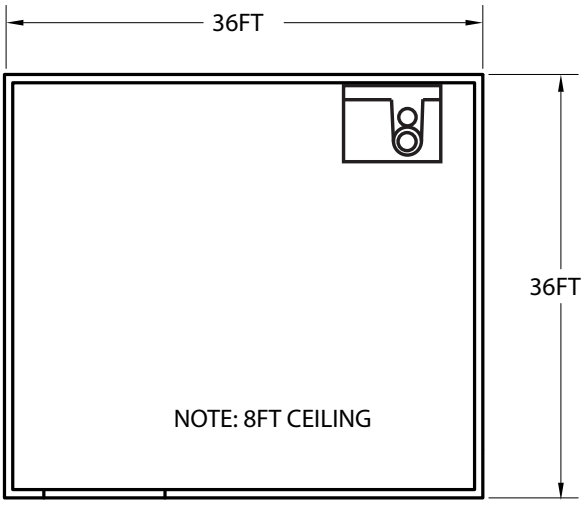

Unconfined Space

200,000 BTU Boiler

Unconfined space

figure 19

Confined Space:
(Small Room, Closet, Alcove, Utility Room, Etc.)
A confined space is defined in the NFPA #54 as "a space whose volume is less than 50 cubic feet per 1000 Btu/hr (4.8 m3 per kW per hour) of the aggregate input rating of all appliances installed in that space." A confined space must have two combustion air openings. Size the combustion air openings based on the BTU input for all gas utilization equipment in the space and the method by which combustion air is supplied:

Using indoor air for combustion
Using outdoor air for combustion

Louvers and Grills
When sizing the permanent opening as illustrated in figure 17, consideration must be taken for the design of the louvers or grills to maintain the required free area required for all gas utilizing equipment in the space. If the free area of the louver or grill design is not available, assume wood louvers will have 25% free area and metal louvers or grills will have 75% free area. Under no circumstance should the louver, grill or screen have openings smaller than ¼".

Example:
Wood: 10 in x 12 in x 0.25 = 30 in2
Metal: 10 in x 12 in x 0.75 = 90 in2

Location
To maintain proper circulation of combustion air two permanent openings (one upper, one lower) must be positioned in confined spaces. The upper shall be within 12 inches of the confined space and the lower opening shall be within 12 inches of the bottom of the confined space. Openings must be positioned as to never be obstructed.

Combustion air provided to the boiler should not be taken from any area of the structure that may produce a negative pressure (i.e. exhaust fans, powered ventilation fans).

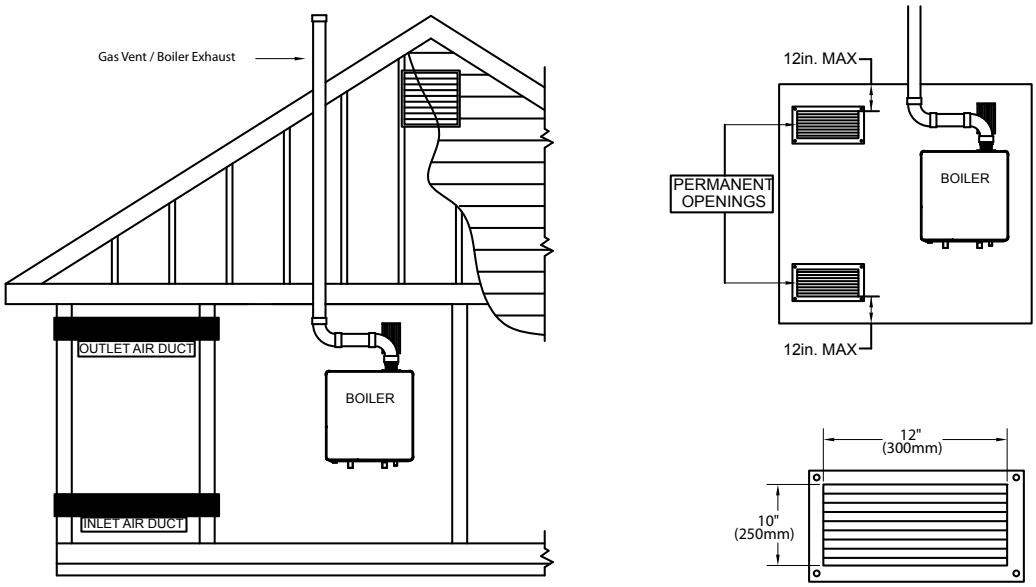

Louvers and grills figure 20

Using Indoor Air For Combustion
When using air from other room(s) in the building, the total volume of the room(s) must be of adequate volume (Greater than 50 cubic feet per 1000 Btu/hr). Each combustion air opening must have at least one square inch of free area for each 1000 Btuh, but not less than 100 square inches each.

Using Outdoor Air For Combustion
Outdoor air can be provided to a confined space through two permanent openings, one commencing within 12 in. (300mm) of the top and one commencing within 12" (300mm) of the bottom, of the confined space. The openings shall communicate to the outside by one of two ways:

directly through horizontal ducts
indirectly through vertical ducts

When communicating directly with the outdoors through horizontal ducts, each opening shall have a minimum free area of 1 in^2/2000 Btu/hr (1100 mm^2/kW) of total input rating of all appliances in the confined space.
Note: If ducts are used, the cross sectional area of the duct must be greater than or equal to the required free area of the openings to which they are connected.

When communicating indirectly with the outdoors through vertical ducts, each opening shall have a minimum free area of 1 in^2/4000 Btu/hr (550 mm^2/kW) of total input rating of all appliances in the confined space. Combustion air to the appliance can be provided from a well ventilated attic or crawl space.

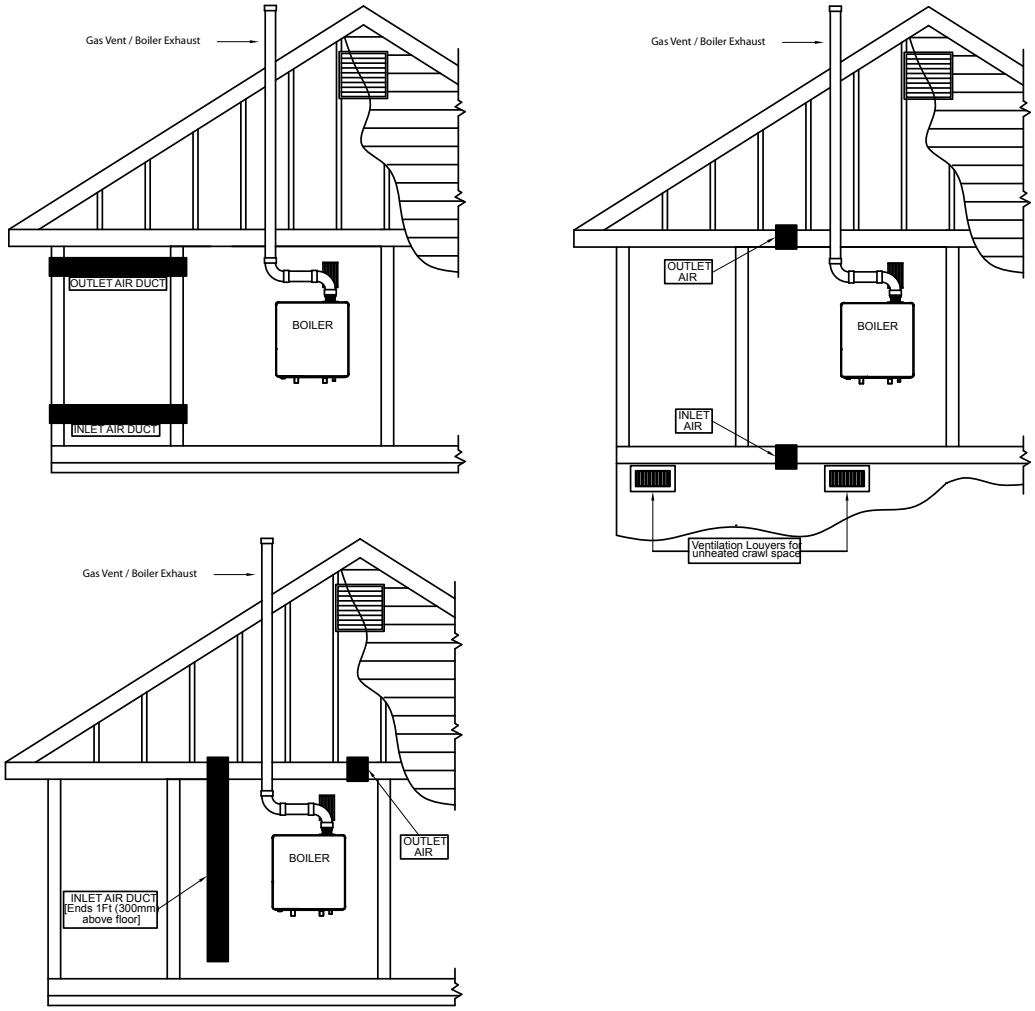

Louvers and grills

figure 21

7 External domestic hot water tanks

WARNING

Note the local codes for requirements for connecting an external hot water cylinder to the boiler. The installation must comply to these codes.

Depending on the domestic hot water requirements and comfort preferences various external hot water tanks can be connected to the boiler.

Connecting an external hot water tank to the E-Series solo boilers can be done in 2 ways:

1. For E60SR, E85SR and E110SR:
Using an optional three-way valve installed in the return line under the boiler between boiler and plumbing kit and directly controlled by the boiler control.

2. For E60SR, E85SR and E110SR:
An external hot water tank connected on the secondary side of the optional plumbing kit, seperately controlled by another device.

The capacity of the boiler must be defined by the installer.

The choice of the tank depends on the coil output.

NOTICE

The coil output of the tank must comply with the boiler output.

NOTICE

For additional information on piping and control of indirect tanks, please see the Rinnai Boiler Applications Manual.

NOTICE

For additional information on the Rinnai 3-way valve indirect tank kit, please see the installation manual for the kit.

NOTICE

Rinnai recommends the use of a thermostatic mixing valve on all indirect tanks used with E boilers on the domestic hot water side to prevent scalding. This valve will regulate the water temperature leaving the indirect tank.

8 Electrical connections

The electrical connections to the boiler must be electrically grounded in accordance with all applicable local codes and the latest revision of the National Electrical Code, ANSI/NFPA-70.

Devices such as, outdoor sensor, room thermostat or temperature control, and temperature sensor or thermostat are all connected to the internal connection terminal. The connection terminal is situated behind the Control Tower.

Connecting incoming power
Install a 120V main switch next to the boiler as service main switch of the boiler.
Lead the cable through the back part of the boiler using a strain relief and lead the cable through the cable supports to the Control Tower. Use a step drill bit to create a knockout in the grey plastic cover of the boiler for a strain relief.
Connect a power supply cable to the cable harness terminal strip that connects to both the power switch on the front of the Control Tower and the terminal strip with positions 1, 2, and 3 on the inside of the Control Tower.

CAUTION

The boiler must be electrically grounded in accordance with local codes, or in absence of local codes, with the National Electrical Code, ANSI/INFPA 70.

CAUTION

RISK OF ELECTRIC SHOCK.
Once the main power supply is on then there is 120V on terminals 1 to 12 when the main switch next to the boiler is switched on.

CAUTION

- **No changes may be made to the wiring of the boiler;**
- **All connections should be designed in accordance with the applicable regulations;**

CAUTION

- **Label all wires prior to disconnection when servicing controls. Wiring errors can cause improper and dangerous operation.**
  ATTENTION:
  Au moment des contrôles d'entretien, étiquetez tous les fils avant de les débrancher. Des erreurs de câblage risquent de nuire au bon fonctionnement et peuvent être dangereux.
- **Verify proper operation after servicing.**
  S'assurer du bon fonctionnement une fois l'entretien terminé.

NOTICE

The Rinnai room thermostat and controls must be connected to their allocated connections. All other types or makes of room thermostats or controls which are used must have a Volt free contact.
When using an on/off thermostat or control, it may be necessary to calibrate the anticipating resistance to prevent too high temperature fluctuations. As a standard rule this means mercury thermostats. This resistance wire is present in the Control Tower and must be connected to terminals 23 and 27. The anticipating resistance in the room thermostat has to be set at 0.11 A.
For more detailed questions regarding the components which are not supplied, the distributor should be contacted.

NOTICE

When wiring an RS100 it is suggested that a jumper be placed on terminals 22 and 23 so that in the event the control is damaged the boiler will still fire based on outdoor reset.
A jumper should also be used when commissioning or trouble shooting the boiler.

NOTICE

Power stealing thermostats cannot be connected to terminals 22 and 23.

Connection terminal E-Series

120 V~ Power supply			120 V~			120 V~			120 V~			8U.35.60.00	Cylinder connection three-way valve				DHW sensor		Outside sensor		Bus Controller		Room therm. On / Off		External safety contact		24 V~ 100 mA	
⏚	N	L	⏚	N	L	⏚	N	L	⏚	N	L		CH	DHW	N						A	B						
1	2	3	4	5	6	7	8	9		10	11		12	13	14	15	16	17	18	19	20	21	22	23	24	25	26	27
main power supply			120 Volts for external pump			120 Volts Rinnai only			120 Volts Rinnai only				internal or external three-way valve motor and tank sensor						ARV12 outdoor sensor		Bus room thermostat RS100		On/off thermostat or control (Volt free)		External safety contact			

CAUTION

CAUTION
Make sure that the power consumption of each of the terminals 4-5-6 does not exceed 230W or 2 Amp.

CAUTION

CAUTION
Terminals 7 to 11 are for Rinnai use only and not for use in any installation.

Connection terminal *figure 22*

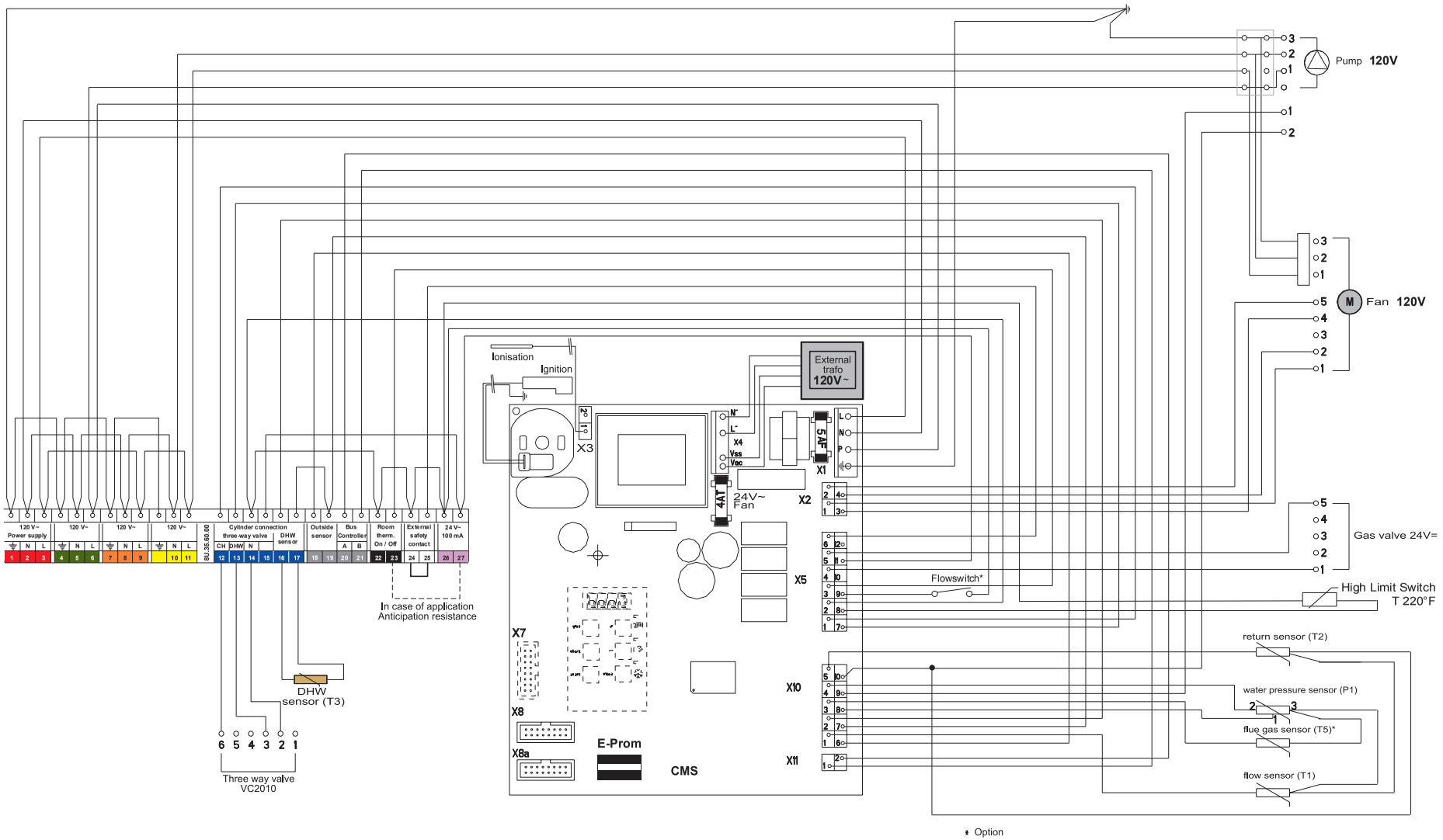

CAUTION **Label all wires prior to diconnection when servicing or replacing controls. Wiring errors can cause improper and dangerous operation**

electrical diagram

figure 23

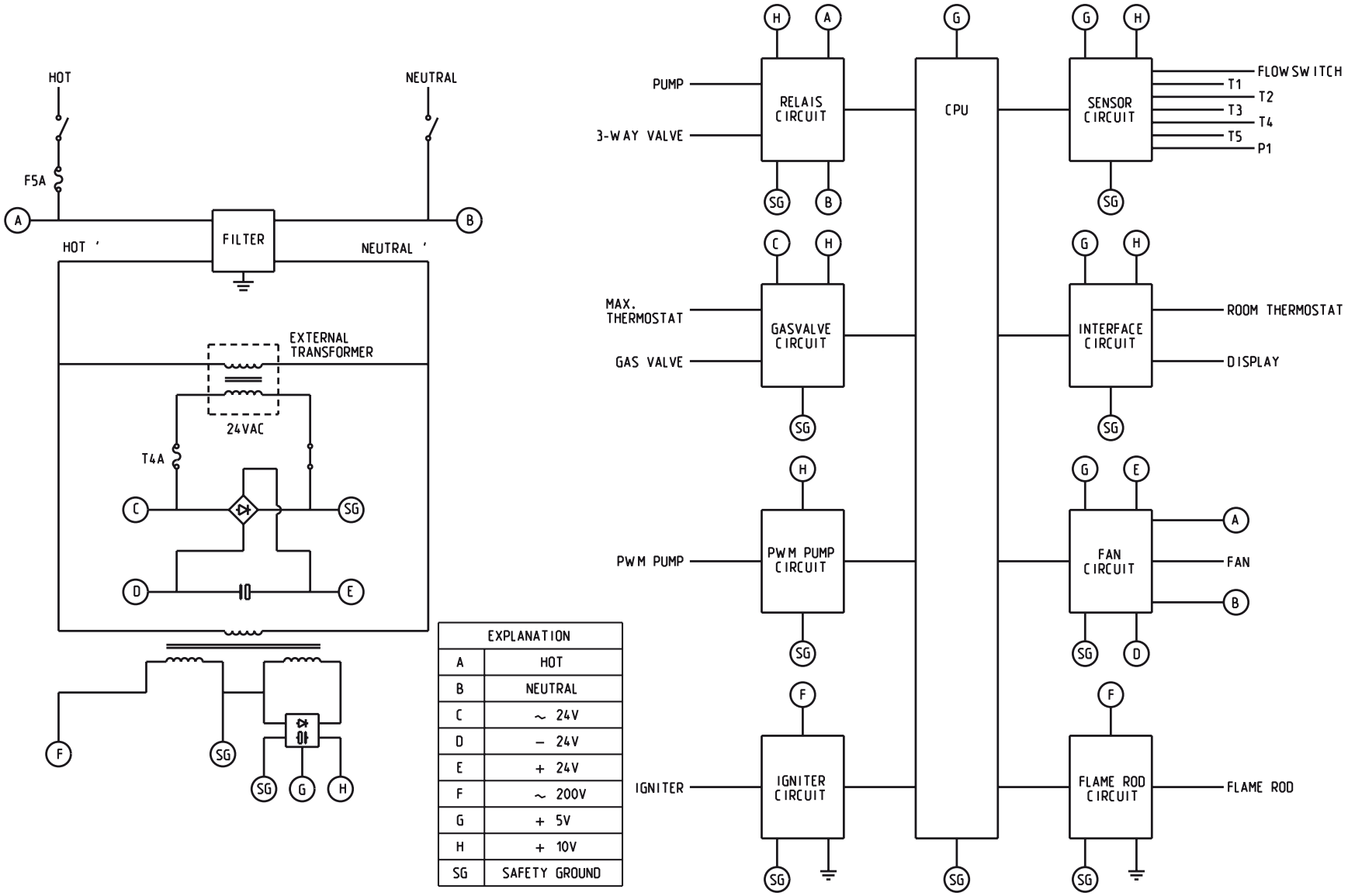

EXPLANATION	
A	HOT
B	NEUTRAL
C	~ 24V
D	– 24V
E	+ 24V
F	~ 200V
G	+ 5V
H	+ 10V
SG	SAFETY GROUND

electrical ladder diagram

figure 23a

9 Boiler controls

The boiler is provided with a fully automatic microprocessor control, called CMS Control Management System. This control simplifies operation by undertaking all major control functions. Initially when power to the unit is switched on it will remain on standby. There is no indication LED on, until one of the program buttons is pressed. The control panel display will show the relevant state. When the boiler installation is empty the display will show FILL.
The various parameters can be called up in two ways:

The Good-state or standard read out

The first way shows a simple display read out.
The boiler in operation will always show 'Good'. When a message is necessary this will be shown instead of Good.

Technical read out

The second way is a technical read out. In normal situations the following will be shown:

Example

- on the left the status in which the boiler is active;
- on the right the supply temperature in °F;

Alternately indicated by:

Example

- the water pressure in the installation in PSI.

When a message (error or blocking code) is necessary this will be shown instead of the technical read out.

NOTICE

To switch over from the Good-state to the Technical read out (and vice versa):
- Press the STEP-button for 5 seconds.

When the system has been filled the automatic de-aeration program starts, when a program has been selected, by pressing the button for Central Heating, DHW or pump program (, of). The program takes 17 minutes and stops automatically. After this the unit will function normally. (See also 'Filling and de-aerate the boiler and installation, chapter 10).

On a call for heating or hot water the control system will select the required water control temperature. This water temperature is called the T-set value. On a call for central heating the boiler ignites first at low input. The input is then changed slowly to match the load required. The boiler operates in this way to avoid excessive water noises and temperature overshoot. On a call for domestic hot water supply the T-set value of central heating return water temperature is monitored. Depending on the amount of domestic water which is withdrawn from the DHW fixture, the central heating return water temperature, from which the input is adjusted, will vary.

Operation indication

(in the first display position by technical read out)

0	No heat demand
1	Fan pre/post purge
2	Ignition phase
3	Burner active on central heating
4	Burner active on DHW
5	Fan check
6	Burner off when room thermostat is demanding or burner off when DHW is calling
7	Pump overrun phase for central heating
8	Pump overrun phase for hot water
9	Burner off because of to high flow temperature
A	Automatic de-aeration program

9.1 Explanation of the function buttons

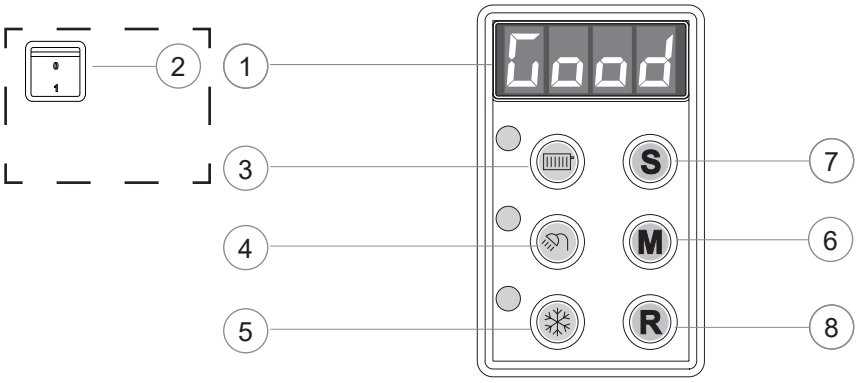

Boiler control panel figure 24

NOTICE

Only licensed professionals who are trained for servicing these boilers are permitted to make alterations in the controller to calibrate the boiler to the installation.

1. **Display**. See previous page for further information.
2. **ON-OFF Switch (Placed separately next to the boiler)**
   This switch turns the power supply to the boiler on or off.

CAUTION

Only turn the boiler off using this switch, when the burner is off.

3. **Central Heating program button.**
   Switching the Central Heating on or off (LED on/off);
4. **Hot Water program button.**
   Switching the Domestic Hot Water (DHW) facility on or off (LED on/off);
5. **Pump program button.**
   adjusts the pump to continuous water circulation in the central heating system (LED on), or according to the pump overrun times on the relevant programs (LED off);

NOTICE

If the boiler is installed in a zoned system and the constant recirculation function (5 pump program button) is activated then a differential pressure bypass valve or a low loss header plumbing kit is required to be installed.

NOTICE

When the pump is switched on continuously it can lead to undesired heating up of the central heating system during the summer.

6 **Mode-button.**
After briefly pressing, a selection of the data chapters can be retrieved. After pressing for 5 seconds it is possible to enter the code as described in chapter 12.3;

7 **Step-button.**
After briefly pressing, the water pressure can be retrieved and pages per chapter can be retrieved.
After pressing for 5 seconds it switches from the Good-state to technical read out and vice versa;

8 **Reset-button.**
After briefly pressing, for:
- unlocking errors;
- ending the access code;
After pressing for 5 seconds an operating stop is made, for example, for activating the automatic venting program.

Some buttons have other functions.These functions are only active according to the procedure described in chapter 11, adjustment has to be changed or data must be retreived from the CMS. The other functions are:

3. Central Heating program button :	+ function;
4. Hot Water program button:	- function;
5. Pump program button :	store-function, which means that by means of this button a modified setting is confirmed;
7. Step-button:	scrolling in a data chapter.

10 Starting up: Filling and de-aerating the boiler and installation

CAUTION

CAUTION
Observe the following rules of safety:
- All work on the unit must take place in a dry environment.
- Rinnai units may never be in operation without their housing, except in connection with maintenance or adjustments (see Chapter 132 and 14).
- Never allow electrical or electronic components to come into contact with water.

NOTICE

NOTICE
Carry out the following tasks in connection with maintenance, etc. to an already-installed unit:
- Shut down all programs
- Close the gas shut off valve
- Shut off the power at the main power switch
- Close the service valves (system supply and return)

NOTICE

NOTICE
Take note of the following when maintenance or adjustments are needed:
- The unit must be able to function during these activities; for this reason, the unit's supply voltage, gas pressure and water pressure must be maintained. Ensure that this is not a source of potential danger during these activities.

WARNING

Following maintenance or other activities; always check the installation of all parts through which gas flows (with bubble test using leak-search spray).

10.1 Requirements of the water system

Before filling the heating system, the complete system, including all zones, must be thoroughly cleaned and flushed to remove sediment. Flush until clean water runs free of sediment. Rinnai suggests using an approved system cleaner to flush the system, but not the boiler. Always use Rinnai approved antifreezes. See the list at the end of this chapter. Never use reverse osmosis, deionized, or distilled water for filling the heating system.

WARNING

Do not use petroleum-based cleaning or sealing compounds in the boiler system. Damage of seals and gaskets in boiler and system could occur, resulting in property damage.

The central heating installation needs to be filled with potable water.

WARNING

Use only potable water or approved glycol for filling the heating system.
When the water hardness of the filling water exceeds > 10.5 gpg (200 mg/L) the water has to be treated until below the maximum value of 10.5 gpg (200 mg/L).
The pH value of the installation water must be between 6.5 and 8.5.

Check the pH value using proper equipment or by having the water analyzed by a water treatment company.
If pH differs from above, contact Rinnai engineering for further assistance.

NOTICE

Component or product damage as a result of failing to adhere to the water quality requirements will not be covered by the limited warranty.

Freeze protection

Freeze protection for new or existing systems must use glycol that is specially formulated for this purpose. This includes inhibitors, which prevent the glycol from attack the metallic components. This should be for multi-metallic components.
Make certain to check that the system fluid is correct for the glycol concentration and inhibitor level. The system should be tested at least once a year and as recommended by the producer of the glycol solution. The allowed maximum concentration is 50%.

NOTICE **Use only Rinnai approved inhibitors. See below for an approved list of inhibitors.**

WARNING **Use only inhibited propylene glycol solutions, which are specially formulated for central heating systems. Ethylene glycol is toxic and can attack gaskets and seals used in the boiler and system. Approved glycols are listed below.**

NOTICE **Additives in the installation water are not permitted.**

Approved antifreeze: (max. concentration 50%)	• Rhomar RhoGard Mutli-Metal (AL safe) • Noble Noburst AL	• Sentinel X500 • Fernox Alphi 11
Approved system cleaner:	• Noble Noburst Hydronic System Cleaner • Rhomar Hydro-Solv 9100	• Fernox F3 Cleaner • Sentinel X400

NOTICE **The system cleaners from NoBurst, Rhomar, and Fernox are not to be used in the boiler. The boiler must be closed off (valved off) from the rest of the system or not connected while the cleaners are in the system. The system should then be drained and then thoroughly flushed with clean water to remove all the system cleaner.**

Approved inhibitors:	• Rhomar Pro-tek 922 • Noble Noburst AL inhibitor	• Sentinel X100

10.2 Filling the heating system

For filling or topping off the installation you use the filling loop according to the following procedure:

1 Switch on the power supply;

FILL 2 The display will show FILL;

3 All functions off (heating, DHW and pump);

S 4 Push briefly the 'STEP'-button: P XX (XX = water pressure in PSI);

5 Open the filling loop (Indication on display increases);

P 22 6 Fill up slowly to 16 to 18 PSI;

StoP 7 STOP appears on the display;

8 Close the filling loop;

9 De-aerate the complete installation, start at the lowest point;

10 Check the water pressure and if necessary top it up;

11 Close the filling loop;

12 Activate the functions in use (heating, DHW and/or pump);

A XX	13 If A XX appears on the display, wait for 17 minutes;
	14 Check the water pressure and if necessary top it up to 16 to 18 PSI
	15 Close the filling loop;
S	16 Press the 'STEP'-button;
	17 Be sure that the filling loop is closed.
A XX Good 0 XX	18 After the automatic de-aeration program (A XX) is finished the boiler will return to the Good state or Technical read out.

Check the water pressure regularly and top off the installation when necessary.
The working pressure of the installation should be between 16 and 18 PSI when the system is cold.

NOTICE

It can take a while before all air has disappeared from a filled installation. Especially in the first week noises may be heard which indicate the presence of air. The automatic air vent in the boiler will remove this air, which means the water pressure can reduce during this period and therefore topping off with water will have to be done.

During normal use the following messages can occur with the necessary follow up:

FILL

Water pressure is too low (<10 PSI), FILL indication remains continuously visible, the boiler is taken out of operation. The installation needs to be topped off.

FILL

Water pressure is too low (<12 PSI), flashing FILL will alternate with indication of water pressure, boiler power of 50% is possible. The installation needs to be topped off.

HIGH

Water pressure is too high (>42 PSI), if HIGH indication remains continuously visible, the boiler is taken out of operation. The installation pressure needs to be decreased by draining water.

FOR YOUR SAFETY READ BEFORE OPERATING

WARNING: If you do not follow these instructions exactly, a fire or explosion may result causing property damage, personal injury or loss of life.

A. This appliance does not have a pilot. It is equipped with an ignition device which automatically lights the burner. Do NOT try to light the burner by hand.

B. BEFORE OPERATING smell all around the appliance area for gas. Be sure to smell next to the floor because some gas is heavier than air and will settle on the floor.
WHAT TO DO IF YOU SMELL GAS
- Do NOT try to light any appliance.
- Do NOT touch any electrical switch.
- Do NOT use any phone in your building.
- Immediately call your gas supplier from a neighbor's phone. Follow the gas supplier's instructions.
- If you cannot reach your gas supplier, call the fire department.

C. Use only your hand to push in or turn the gas control knob. Never use tools.
If the knob will not push in or turn by hand, don't try to repair it, call a licensed professional.
Force or attempted repair may result in a fire or explosion.

D. Do not use this appliance if any parts have been under water. Immediately call a licensed professional to inspect the appliance and to replace any part of the control system and any gas control which has been under water.

OPERATING INSTRUCTIONS

1. STOP! Read the safety information above this label.
2. Turn off al electrical power of the appliance.
3. Set the thermostat or other operating control to the lowest setting.
4. This appliance is equipped with an ignition device which automatically lights the burner.
   Do NOT try to light the burner by hand.
5. Close main gas shut off valve.
6. Wait (5) minutes to clear out any gas. Then smell for gas. Including near the floor.
   If you smell gas, STOP! Follow "B" in the safety information above on this label.
   If you don't smell gas, go to the next step.
7. Open main shut off valve.
8. Set the thermostat or other operation control to desired setting.
9. Turn on all electric power to the appliance.
10. If the appliance will not operate, follow the instructions "To Turn Off Gas To Appliance" and call your service technician or gas supplier.

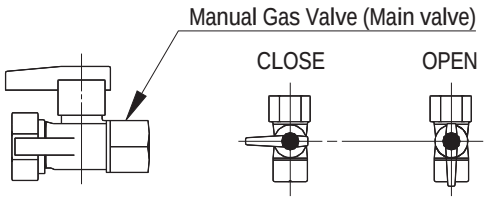

TO TURN OFF GAS TO APPLIANCE

1. Turn off all electric power to the appliance if service is to be performed.
2. Set the thermostat or other operating control to the lowest setting.
3. Close main gas shut off valve.

8U.34.01.01 / 11.12

11 Adjustments

When the boiler is installed the software has already been pre-programmed at the factory. All software adjustments of the boiler control are already pre-programmed for a heating system with radiators/convectors with a supply temperature of 176°F. The adjustments are described in the Parameter chapter on the following page.
In certain cases parameters have to be altered in case of :
- Lower supply temperature
- High altitude/long vent length
- Minimum boiler supply temperature

CAUTION

The venting / altitude calculation must always be performed during commissioning of the boiler.

Read through the Parameter chapter to adjust the boiler to its installation.
Contact Rinnai in case of doubt.

NOTICE

Only licensed professionals who are trained for servicing these boilers are permitted to make alterations in the controller to calibrate the boiler to the installation.

11.1 Altering adjustments

STEP 1

Press the Mode-button for 5 seconds.

The display shows COdE followed by an arbitrary number;

STEP 2

Press by means of the + or the - button until the code C123 is shown;

STEP 3

Press the STORE-button to confirm the code (code blinks1 x).

Now you have acces to the installer level. There are 4 chapters:
- PARA *Parameters*
- INFO *Information chapter (no adjustments possible)*
- SERV *Service chapter*
- ERRO *Error-chapter (no adjustments possible)*

The content of the chapters is described on the following pages.

STEP 4

Press briefly the MODE-button to select one of the 4 chapters, i.e. PARA;

STEP 5

Press briefly and release the STEP-button to select a Parameter

(parameter visible on the left, value on the right) ;

STEP 6

Alter the value, if necessary/possible, by means of the + or the - button

STEP 7

Press briefly on the STORE-button to confirm the alteration.

When you have to change more values, repeat from step 5.

STEP 8

Press once or more on the MODE-button until StBY or Good is shown:

After a few seconds the text StBY will be replaced by the technical read-out or Good-state (Depending from the position the acces code is entered)
When you want to return from an arbitrary position to the original read out press once or more on the MODE-button until StBY is shown.

NOTICE

If no single button is used within 20 minutes the display will return automatically to its original read-out (Good state or technical read out)

Parameter Mode

PARA	FACTORY	DESCRIPTION	RANGE
.	.	.	.
1	176°F	maximum supply temperature CH	68 - 176°F
2*	00	type of CH installation:	00 - 04
		No pre-selection made. Radiators, air heating, or convectors: T max. supply 176°F K factor heating curve 2.3; gradient 10°F/min; gear differential 10°F	00
			01 DO NOT USE
		radiators with large surface areas or underfloor heating as additional heating: T max. supply 158°F K factor heating curve 1.8; gradient 10°F/min; gear differential 10°F	02
		under floor heating with radiators as additional heating: T max. supply 140°F; K factor heating curve 1.5; gradient 8°F/min; gear differential 8°F	03
		full under floor heating: T max. supply 122°F; K factor heating curve 1.0; gradient 6°F/min; gear differential 6°F	04
3	max.	maximum power CH in kW (.. x3415 = .. BTU/hr)	min-max
4*	00	control principal with on / off thermostat:	
		100 % on / off thermostat	00
		constant water circulation 22&23 closed contact day curve operation, open contact night curve operation	01
5*	2.3	heating curve K-factor (see also heating curve graph)	0.2 - 3.5
6*	1.4	heating curve exponent (see also heating curve graph)	1.1 - 1.4
7*	14°F	heating curve climate zone (see also heating curve graph)	-4 - 32°F
10*	0°F	fine adjustment heating curve day temperature	-8 to 10°F
11*	0°F	fine adjustment heating curve night temperature	-8 to 10°F
14	10°F/min.	gradient speed °F/min.	0 - 28°F/min.
15*	00	Booster after night decrease*:	
		no	00
		yes	01
23	-4°F	Frost Temperature	-4 to 50°F
27	100°F	Minimum T-set CH	0 - 158°F
36	00	n.a.	
43	max.	Maximum power DHW in kW (.. x3415 = .. BTU/hr)	min-max
49	100%	Maximum pump capacity heating	100 %
73	0	Altitude and venting CFT. See chapter 6.7.7	0 - 100
89	00	Address	
		No function	-01
		Bus thermostat	00
90	01	Display reading	
		°C and Bar	00
		°F and PSI	01
.	.	.	.

Info Mode

INFO	FACTORY	DESCRIPTION	RANGE
.	.	.	.
1	°F	supply water temperature T1	
4	°F	return water temperature T2	
5	°F	DHW temperature T3	
7	°F	outdoor temperature T4	
8	°F	flue gas temperature T5 (optional sensor)	
16	%	actual power in %	
17	kW	actual power in kW (.. x3415 = .. BTU/hr)	
18	kW	actual load in kW (.. x3415 = .. BTU/hr)	
20		indication bus communication	
21	GJ	consumption total in GJ (.. x 33 = .. m3)	
22	GJ	consumption CH in GJ (.. x 33 = .. m3)	
23	GJ	consumption DHW in GJ (.. x 33 = .. m3)	
24	h	total number of burner run hours	
25	h	number of burner run hours CH	
26	h	number of burner run hours DHW	
32	h	total number of hours counter	
37	h	total number of run hours pump CH and DHW	
46	h	within how many hours is service required	
.	.		.

Service Mode			
SERV	VALUE	DESCRIPTION	RANGE
1	OFF	boiler in operation with burner function on	OFF - max.
2	OFF	fan adjustable and burner off	OFF - max.
3	OFF	pump adjustable with burner on	OFF - max.
4	OFF	showroom position ON = active and OFF = non active	ON - OFF
.	.	.	.

Error Mode		
ERRO	VALUE	DESCRIPTION
Err.L - Err.5		Last saved error until 5 last previous errors
1		error code
2		operation status boiler
3	°F	supply water temperature T1
4	°F	return water temperature T2
5	kW	load (.. x3415 = .. BTU/hr)
6	%	pump capacity

Parameter-, Info-, Service- and Error-chapters Table 12

NOTICE

* **Most of the data in this table can be requested by the RS100. Most of the adjustments which are stated in this table are unnecessary when in combination with the Rinnai RS100 thermostat and will be taken care of by the RS100 itself and do not have to be adjusted. For further information regarding to the RS100 thermostat refer to the Rinnai RS100 installation manual.**

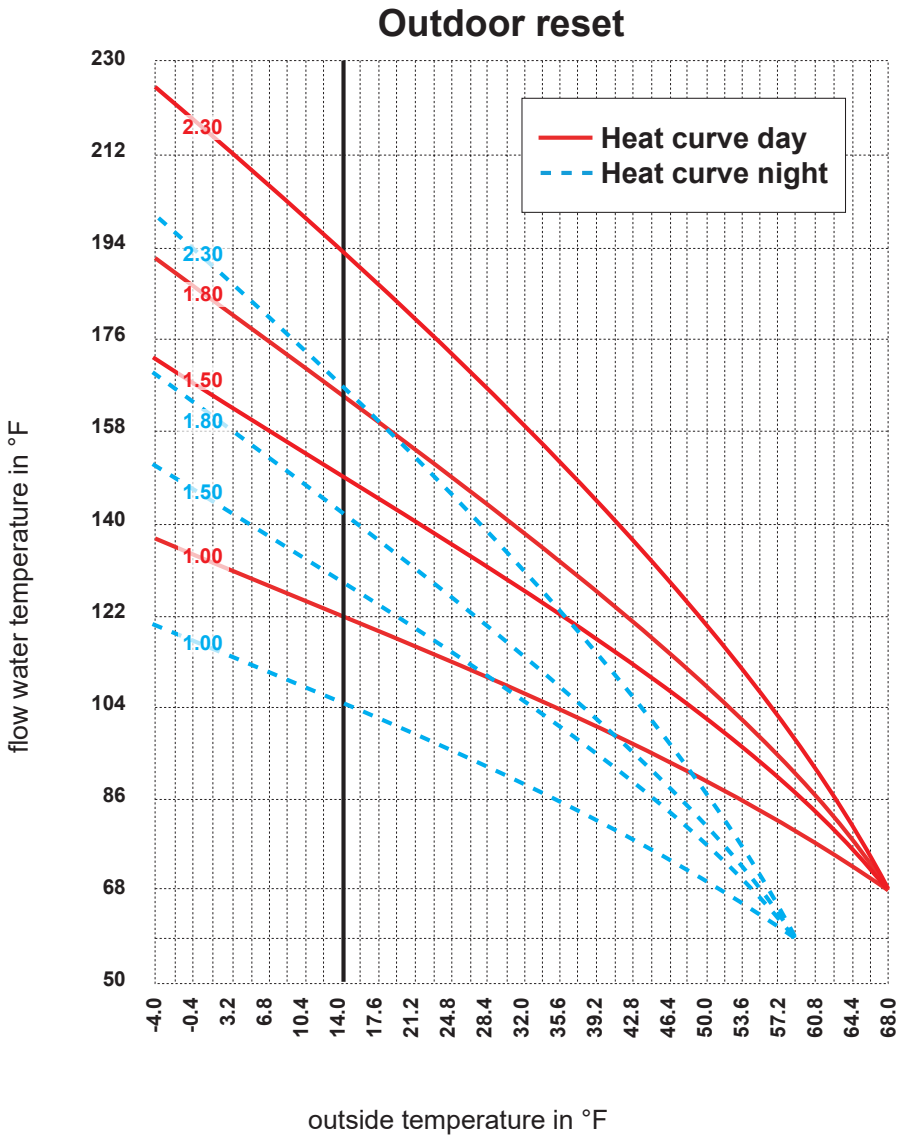

heating line adjustments Parameter Step 6 and 7 graph 2

11.2 Activating factory settings (green button function)

To activate the factory settings again please follow the next procedure (Note: all altered adjustments will be set back to their orignial factory settings that are accessible in the current service level the boiler is in either user or 123):

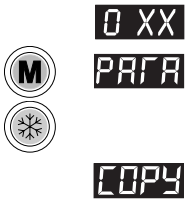

- Select, when necessary, the technical read out;
- Select with the MODE-button chapter PARA;
- Press the STORE-button.

The word "Copy" will appear and the factory settings are active again.

12 Isolating the boiler

Some situations require turning the entire boiler off.
By switching off the three buttons with the LED's for central heating, hot water and pump program (, or), the boiler is switched off. Do not shut off the power of the boiler, which means the circulation pump and the three-way valve are activated once every 24 hours in order to prevent these parts from seizing up.

CAUTION

In the event of freezing danger with an isolated boiler it is advisable to drain the boiler and/or the installation.

13 Commissioning

NOTICE

Work on the boiler must be carried out by a licensed professional, using correctly calibrated instruments with current test certification.
These installation instructions are intended for licensed professionals, who have the necessary knowledge and are approved for working on heating and gas systems.

Before the boiler is fired, ensure that the boiler and the system are well de-aerated and free of air. Purge the gas line between the gas meter and the boiler.

WARNING

Failure to properly commission the boiler as described in section 14 may result unreliable burner operation, reduced component life, and unsafe boiler operation.

NOTICE

The boiler and its individual shut off valve must be disconnected from the gas supply piping system during any pressure testing of that system at test pressures in excess of 1/2 PSI (3.5kPa).

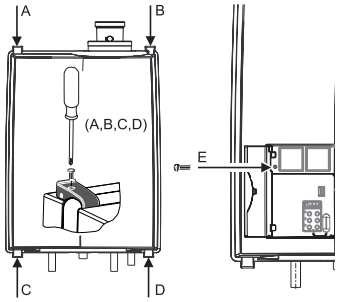

Installing casing *figure 25*

To commission the boiler the casing has to be removed.
- remove the 4 screws A,B,C and D in the quick releases of the casing (figure 25);
- remove the screw E behind the door on the front of the casing (figure 25);
- remove it towards the front.

The boiler settings, such as burner pressure and adjustment of the air quantity are unnecessary in most cases, due to the fact that the boiler operates with a zero pressure control. This means the correct gas quantity is controlled by the suction operation of the fan. The fine adjustment of the zero pressure, which is carried out at the factory is once-only, which means that adjusting of this value is unnecessary. Only in case of replacing of the gas valve, venturi and/or fan will the zero pressure adjustment have to be checked and, if necessary, adjusted to the right value.

WARNING

The venturi must always be checked and adjusted when it is out of range see section 12.3 on O_2 adjustment.

DANGER

Always check the installation of all parts through which gas flows (by bubble test using leak-search spray).

Pump commissioning procedure should be followed before the boiler is fired for the first time:
1. Remove the vent pump screw
2. Use a small flat head screw driver to ensure the impeller spins freely.
3. When the impeller spins freely and water exits though the vent port the pump is ready for operation.
4. Replace the vent screw

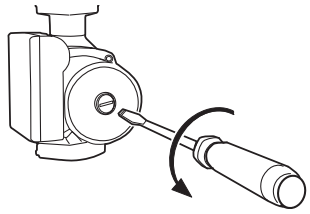
Pump commissioning
figure 26

During the commissioning of the boiler the Rinnai Installation, Commissioning, and Service card must be filled out.

13.1 Testing for gas leaks

Prior to start-up of the boiler you must check the external tightness of the gas supply valve and confirm this in the start-up report.

WARNING

- **Before leak testing the boiler, ensure all parts of the boiler such as electronics and wiring are properly covered and protected from the leak testing agent.**
- **Do not spray the leak testing agent onto cables, plugs, electrical connection lines or electronic circuit boards. Do not allow it to drip onto them either.**

DANGER

Leaks may be caused to pipes and screw connections during commissioning and maintenance activities.
- **Carry out a proper leak test.**
- **Only use approved leak detection agents for leak detection.**
- Disconnect the heating system from the power supply.
- Check the exterior tightness of new conduit sections up to and including the direct sealing point on the gas burner fitting. The maximum test pressure allowed on the input of the gas burner fitting is 14 inch W.C. (35mbar).

13.2 Testing the Ignition Safety shut off device

- Switch off system using the Central Heating button and the DHW button

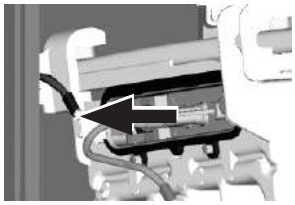

- Disconnect the plug and socket connection of the ionization cable.

- Switch on the sytem using the Central Heating button and the DHW button.
- Press the MODE-button for 5 seconds.
- The display will show COdE followed by an arbitrary number;
- Select by means of the or the button the code C123;
- Press the Store-button to confirm the code (code blinks 1 x);
- Press the MODE-button until SERV is shown;
- Press the STEP-button once until 1 is shown;
  alternately 1 and OFF will be shown.
- Press the button once;
  Check if the boiler does one start-up attempt and four restart attempts.
  After the last start-up attempt, the boiler will lock out. The gas valve is shut off.
  The E02 code is blinking in the display.
- Connect the plug and socket connection of the ionization cable.
- Press the reset button.
- Check if the boiler starts-up.

WARNING

Do not touch the inside of the igntion cable while it is disconnected during start up of the boiler.

13.3 Checking the O_2

NOTICE

The O_2 percentage setting is required to be checked at commissioning, maintenance and faults and adjusted if needed.

WARNING

The O_2 percentage is required to be checked and adjusted after a conversion from NG to LP or from LP to NG. This process must be done with a calibrated combustion analyzer that has been set to the correct gas type.

This can be checked by means of the following procedure:

- Remove the black cover of the gas valve by unscrewing the sealed screw.

- Put the boiler into operation and take care that it can deliver its heat;

Tip: If there is no demand for heat on CH, turn the hot water tap completely open and measure the O_2.

- Press the MODE-button for 5 seconds.

- The display will show COdE followed by an arbitrary number;

- Select by means of the or the button the code C123;

- Press the Store-button to confirm the code (code blinks 1 x);

- Press the MODE-button until SERV is shown;

- Press the STEP-button once until 1 is shown;
  alternately 1 and OFF will be shown.

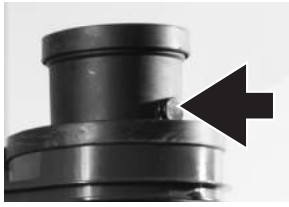

checkpoint O_2

figure 27

- Calibrate the O_2 meter ;

- Place the probe of the O_2 meter into the check point (see fig. 27);

- Press the button until the maximum value (in kW) is achieved;
  The boiler will burn on full load (value on display in kW)
  value in BTU/hr = x3415

NOTICE

When adjusting from max. to min. load it is advisable to stop at medium load to allow the boiler to stabilize. Adjusting quickly from max. to min. could force the boiler into an error state.

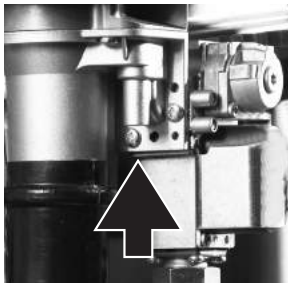

adjustment screw O_2 fig. 28

- Check the O_2 percentage:

Natural Gas:	full load:	between 4.4% and 4.7%
	min. load:	setting of full load +0.2% or greater
Propane:	full load:	between 4.8% and 5.1%
	min. load:	setting of full load +0.2% or greater

Example:Full load set on 4.6% O_2 (natural gas) then the minimum load setting should be 4.8% or greater.

NOTICE

Choose the right O_2 value according the kind of gas (Natural Gas or Propane Gas). Wrong adjustment may result causing property damage, personal injury or death.

- Let the O_2 meter do its measuring procedure.

- Adjust, if necessary, the adjustment screw to correct the O_2 value (see fig. 28). Allow boiler to stabilize before reading the new value.

Ending the O_2 measuring procedure:

- Press the - button until OFF is shown (keep button pressed).
  With this the procedure has ended..

- Replace the black cover on the gas valve and secure it with the screw.

13.4 Measuring the ionization current

- Switch off the system using the Central Heating button and the DHW button

- Disconnect the plug and the socket connection on the probe and connect the measuring device in series. See figure 29. Select the µA direct current range on the measuring device. The measuring device must have a resolution of at least 1 µA.

Ionization test figure 29

- Switch on the sytem using the Central Heating button and the DHW button.

- Press the MODE-button for 5 seconds.

- The display will show COdE followed by an arbitrary number;

- Select by means of the or the button the code C123;

- Press the Store-button to confirm the code (code blinks 1 x);

- Press the MODE-button until SERV is shown;

- Press the STEP-button once until 1 is shown;
  alternately 1 and OFF will be shown.

- Press the button until the maximum value (in kW) is achieved;
  The boiler will burn on full load (value on display in kW)
  value in BTU/hr = x3415

- Measure the ionization. When the boiler is in full load the ionization current must be > 4 µA and write down this value in the log book.

- Press the button until OFF is shown (keep button pressed).

- Switch off the system using the Central Heating button and the DHW button

- Disconnect the measuring device and restore the plug and the socket connection on the probe.

- Switch on the sytem using the Central Heating button and the DHW button.

13.5 Installing the casing

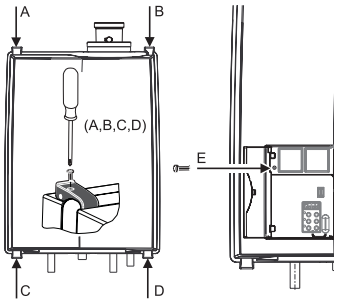

Installing casing figure 30

- Install the cover on the boiler and close all 4 quick releases of the casing
- Tighten the 4 screws A,B,C and D in the quick releases (figure 30);
- Tighten the screw E behind the door on the front of the casing (figure 30);

14 Maintenance

NOTICE

Maintenance or changes to the boiler may only be carried out by a licensed professional.

To protect yourself from harm, before performing maintenance:

- Turn off the electrical power supply by switching off the boiler at the mains power switch or by turning off the electricity at the circuit breaker.
- Turn off the gas at the manual gas valve, usually located below the boiler.
- Turn off the incoming water supply. This can be done at the isolation valve usually located below the boiler or by turning off the water supply to the building.

14.1 Periodic examination of venting systems and boiler

The inspection of the boiler and venting system should be done every 2 years or 4000 hours and full maintenance every 4 years or 8000 hours of operation, whichever occurs first. When doing this the circumstances of the boiler's location must be taken into account. From this one can determine whether to deviate from this advice.

NOTICE

Please contact Rinnai for further guidance on the frequency and service requirements. Contact details can be found on the back page of this manual.

14.2 Inspection

Preparing the boiler for inspection

To carry out the maintenance activities please follow the next procedure:

- Switch off the power supply;
- Shut off the gas;
- Valve off the boiler from the system using the boiler isolation valves in the plumbing kit.
- Remove the 4 screws A,B,C and D in the quick releases of the casing (figure 31);
- Remove the screw E behind the door on the front of the casing (figure 31);
- Remove it towards the front.
- Clean the casing with a cloth with a simple (non-abrasive) cleaning agent;

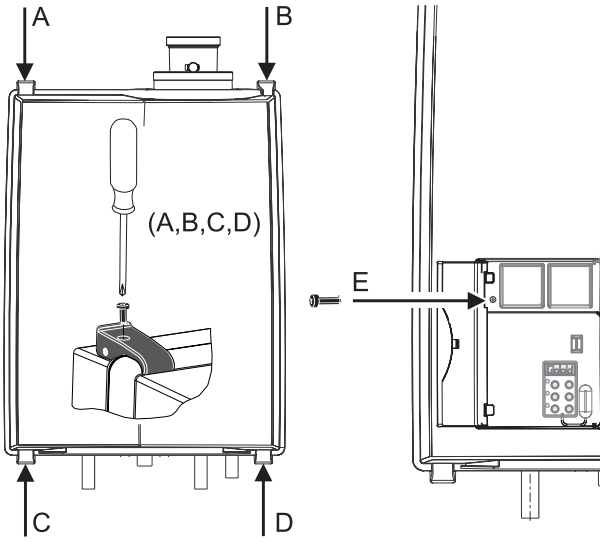

Removing casing

figure 31

14.2.1 Visual inspection for general signs of corrosion

- Check all gas and water pipes for signs of corrosion.
- Replace any pipes that are corroded.

14.2.2 Measuring the ionization current

See subsection 13.5 “Measuring the ionization current".

14.2.3 Measuring the inlet gas pressure

See subsection 6.4.1 and .2 “Gas connection with natural gas" and "Gas connection with propane”.

14.2.4 Testing for gas leaks

See subsection 13.1 “Testing for gas leaks”.

14.2.5 Carrying out a pressure test of the heating system

See chapter 10.2 “Filling the heating system”.

14.2.6 Checking venting systems

Check the following points:
- Is the prescribed combustion air/flue system used?
- Have the instructions for configuring the flue system as specified in the relevant Installation instruction for the flue gas system been observed?
- Check air intake and/or air filter and flue gas for obstruction, pollution or damage.

NOTICE

When an air filter is used the air filter must be replaced yearly on boilers operating in normal circumstances.
The conditions (eg. supply air quality) in which the boiler is installed should be taken into account. This will show whether the frequency of replacement should be reduced or increased. If in doubt, contact RINNAI.

14.3 Maintenance activities

The fan unit and burner cassette (figure 32 to 34) (every 4 year maintenace)

- Remove the electrical connection plug from the gas valve (1) and fan motor (2);
- Loosen the nut (3) of the gas pipe under the gas valve;
- **Replace the gasket with a new one**;
- Loosen the front cross head screw (4) of the black plastic silencer;
- After this turn the two clamping rods (9 and 10) ¼ turn and remove them by pulling them forward. **Note the correct turning direction (red indicator. fig. 34)**;
- Slightly lift the fan unit and remove it towards the front of the heat exchanger;
- Remove the burner cassette out of the fan unit;
- Check the burner cassette for wear, pollution and possible cracks. Clean the burner cassette with a soft brush and vacuum cleaner.

NOTICE

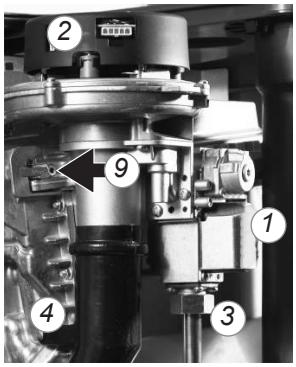

fan unit and gas valve

figure 32

NOTICE

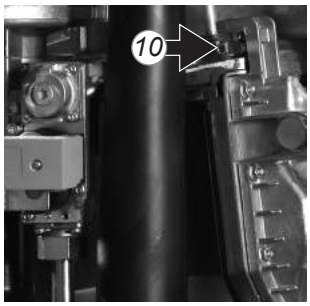

figure 33

If burners are cracked replace the complete burner cassette;

- **Replace the gaskets between burner and fan unit and the gasket between fan unit and heat exchanger**;
- Check the venturi and the gas-air distribution plate for pollution and clean this part, if necessary with a soft brush and vacuum cleaner. If the air box contains a lot of dirt it is plausible that the fan itself is dirty as well. To clean this, the fan has to be removed from the hood and the venturi. Clean the fan with a soft brush and a vacuum cleaner. Replace the gasket and ensure that all gaskets of the fan parts are mounted correctly.

Heat exchanger (every 4 year maintenance)

- Check the heat exchanger for contamination. Clean this if necessary with a soft brush and a vacuum cleaner. Prevent debris from falling down into the heat exchanger.

NOTICE

Flushing the heat exchanger from the top down is not permitted

Refitting of the components is done in reverse order.

DANGER

Make sure that during refitting the clamping rods they are put in the right position. They should be turned vertical.
If the boiler should activate with clamping rods in the wrong position it will cause property damage, personal injury or loss of life.

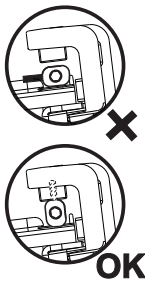

Clamping rods figure 34

Ignition electrode (every 4 year maintenance)

This can be checked by measuring the ionization current. The minimum ionization current has to be higher than 4µA on full load.

If the inspection glass is damaged the complete electrode must be replaced.

Replace the ignition assembly after every 4 year, whichever occurs first.

Replacement goes as follows:

- Remove the electrical connections of the electrode;
- Press the clips on both sides of the electrode to both sides and remove the complete electrode;
- Remove and replace the gasket;

Refitting of the components is done in reverse order.

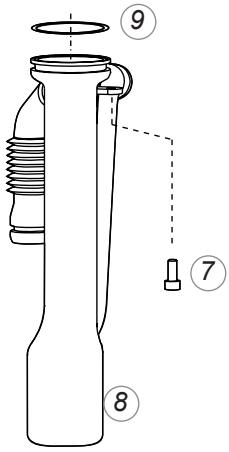

Siphon figure 35

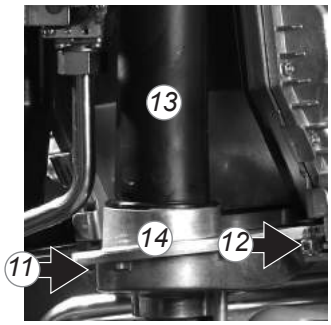

Condensate tray figure 36

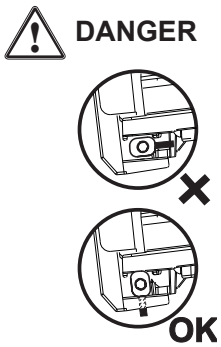

Clamping rods figure 37

DANGER

WARNING

WARNING

Condensate trap and condensate tray (figure 35-37) (2 and 4 year maintenance)

Step 1: Condensate trap

- First remove the screw (7);
- Pull the condensation cup (8) downwards, out of the condensate tray (14) Check this for impurities. If there is not a lot of impurities it is not necessary to clean the condensate tray (Go to Step 3). If there is a lot of impurities in the cup it is necessary to remove and clean the condensate tray according Step 2;
- Check the O-ring (9) of the cup and replace if necessary;
- Clean the parts by flushing it with clean water;
- Grease the O-ring again with acid free O-ring grease to make fitting easier;
- If there is a leak at the condensate trap (8) replace complete condensate trap by # 809000100;

Step 2: Condensate tray

- Remove the plug from the flue gas sensor if present;
- Turn the two short clamping rods (11 and 12) ¼ turn and remove them by pulling them forward; Note the right turning direction (red indicator);
- Lift the exhaust pipe (13) out of the condensate tray (14);
- Press the condensate tray (14) carefully downwards and remove it by pulling it forward;
- Replace the gasket between condensate tray and heat exchanger with a new one;
- Clean the condensate tray with water and a hard brush;
- Check the condensate tray for leaks.

Step 3: Refitting is done in reverse order.
Note that all gaskets seals completely.

Make sure that during refitting the clamping rods they are put in the right position. They should be turned vertical.
If the boiler should activate with clamping rods in the wrong position it will cause property damage, personal injury or loss of life.

Put the boiler into operation and check the O_2 (see chapter 14.3).

If replacement of new gaskets and burner mentioned in this chapter is not done within the service interval subscribed by Rinnai the boiler can be damaged and may cause property damage, personal injury or loss of life.

Use only original spare parts supplied by Rinnai. If non approved parts are used the boiler can be damaged and may cause property damage, personal injury or loss of life. Use of non-Rinnai parts will result in the voiding of the limited warranty.

Do not use substitute materials. Use only parts certified with the appliance.

Visual inspection of the flame (2 and 4 year maintenance)

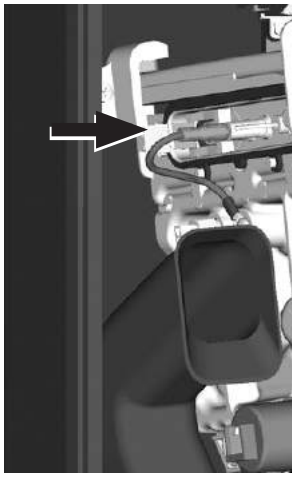

Inspection glass figure 39

The burner must flame evenly over the entire surface when operating correctly. The flame must burn with a clear, blue, stable flame.

Check the flame through the inspection glass in the ignition probe (fig. 38).

The flame pattern should be as shown in the figures below.

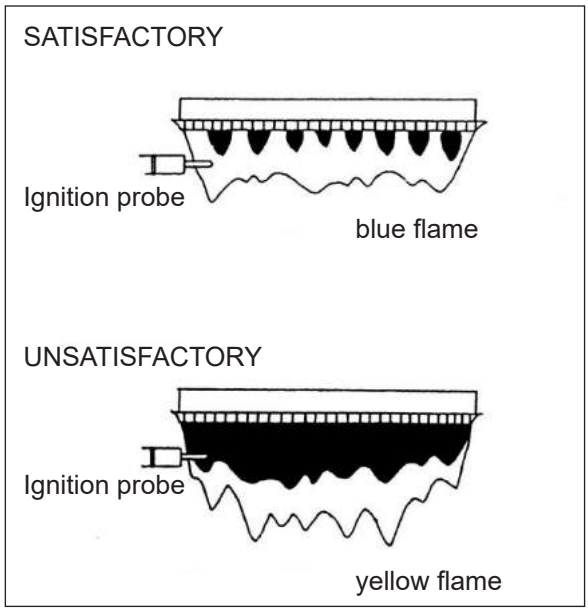

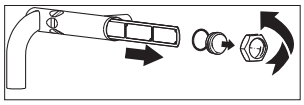

Water filter figure 40

Further checks:
- Inspect the pressure relief valve
- Clean the water filter in the return pipe
- Check the pH of the water or glycol/water mixture.

NOTICE

The combustion must be checked and adjusted if required at both the 2 year/4000 hour and 4 year/8000 hour service intervals with a properly working combustion analyzer.

Verify proper operation after servicing. Always reset the service interval counter after full maintenance interval (every 4 years or 8000 hours of operation).

14.3.1 Reset service interval counter

At 8000 hours of use, “SERVICE” will scroll across the display. “Good” will display as well alternatively.
To reset the 8000 hour service notification:

- Enter the 1st Tier Settings: 123 Code
- Briefly press “Mode” again until the Service Chapter is displayed (SERV)
- Hold the “Store” button until SERV flashes once—the service notification will no longer show during normal operation and the countdown to service will reset to 8000.

14.4 Limited warranty

For warranty conditions refer to the warranty supplied with the boiler.

15 Parts of the boiler

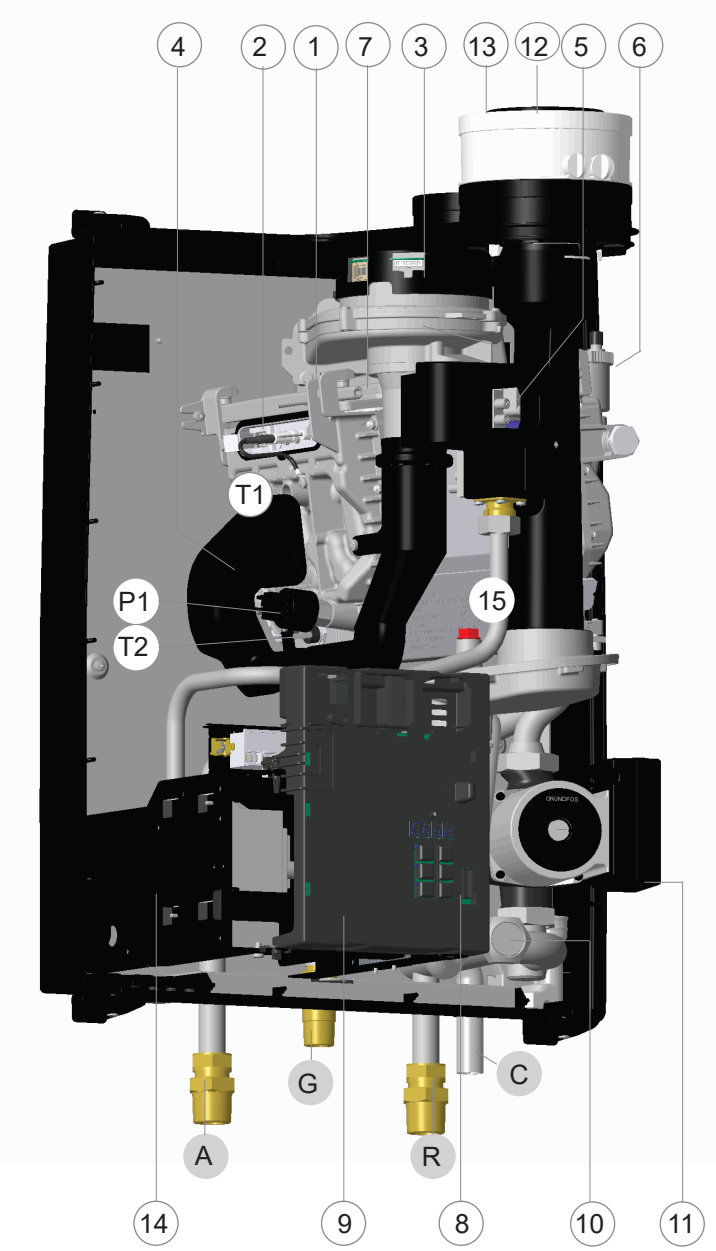

Rinnai E60SR figure 41

1 heat exchanger
2 ignition unit
3 fan unit
4 air inlet damper
5 gas valve
6 automatic de-aerator
7 ceramic burner cassette
8 operating panel
9 Control Tower (CMS)
10 water filter return CH
11 circulation pump
12 exhaust
13 combustion air supply
14 CSA Data Plate (serial number)
15 ASME / NB / CRN data plate

T1 supply sensor
T2 return sensor

P1 water pressure sensor

G gas pipe
A supply central heating
R return central heating
C condensate pipe

16 Blocks and Errors

16.1 Error indication (short reference)

A detected error is indicated on the display by means of blocking or error messages. A distinction should be made between these two messages due to the fact that blocking can be of a temporary nature, however, error messages are fixed lockings. The control will try its utmost to prevent locking and will temporarily switch off the unit by blocking it. The following is a list of some messages.

Blocks bL with a number in the last 2 positions.

bL01 Block 01:
External safety contact cut off

bL05 Block 05:
Outdoor sensor not connected

bL60 Block 60:
Incorrect parameter setting of the minimum or maximum power.

bL67 Block 67:
A ΔT has been detected between flow and return sensor whereas the burner is not in operation. After the ΔT has disappeared the block will clear.

bL85 Block 85:
The control has not detected a water flow. The venting cycle is started.
If during this cycle water flow is detected, the venting cycle is ended and the burner is released.

Error E with a number in the last two positions.

E 00	Error 00:	poor flame-forming
E 02	Error 02:	no flame-forming
E 04	Error 04:	adjustment or error for voltage interruption
E 05	Error 05:	adjustment
E 12	Error 12:	high limit stat
E 18	Error 18:	maximum flow temperature exceeded
E 19	Error 19:	maximum return temperature exceeded
E 28	Error 28:	number of revolutions not reported back from fan
E 69	Error 69:	no or incorrect display
FUSE	FUSE:	24V fuse defective

NOTICE

The following pages describes more detailed follow up instructions for solving blockings, errors and practical circumstances. These instructions are only for licensed professional.

16.2 Blocks

An error, which has been detected, is indicated on the display by a block message. Blocks can be temporary in nature. The controller will do everything possible to prevent a system lock and temporarily switching off the boiler as a result of a block. Please see below for a summary of blocks.
Blocks bL with a figure on the last 2 characters.

Code	Description	Solution
bL01	External safety contact open	Rectify error as a result of which by determining contact is open. Or repair interconnection between 24/25
bL05	Outdoor sensor contact open (not connected)	Rectify error as a result of which by determining contact is open or outdoor sensor is not connected. Connect outdoor sensor or repair wiring (position 18/19) or replace outdoor sensor.
bL60	Incorrect parameter setting for the minimum or maximum power	Call Rinnai
bL67	A temperature difference has been detected between the supply and return sensor whilst the burner is not in operation. After the average ΔT has disappeared, the block will disappear.	Check the supply and return sensor for the resistance value and replace the defective sensor
		Check the installation for any external heat source and rectify this
bL80	flue sensor temperature too high	Check vent system
bL81	flue sensor or thermostat contact open	Call Rinnai
bL82	flue sensor or thermostat contact closed	Call Rinnai
bL84	flue gas thermostat contact open	Check vent system or check parameter 84 for default
bL85	no water flow can be detected through the controller. De-aeration cycle is started. When water flow is detected during this cycle, the de-aeration cycle is terminated and the burner is released. The controller checks the water pressure during static and dynamic situation.	- check the installation for the presence of air;If there is a secondary pump installed and it is not hydraulicly separated, it could cause pressure differences. - check the use of balancing valves
		check if the pump is functioning and/or that the water pressure sensor is working properly; Polluted pump; Polluted water pressure sensor; Polluted water filter; Wiring of pump.
bL86	The frequence of the power supply deviates more than + or -1.5Hz	check the main power supply

16.3 Errors

Code	Description	Solution
E 00	Incorrect flame formation. boiler has not been burning but an ionization flow (flame) has still been detected	Check whether the ionization cable and/or the electrode are responsible for a possible short-circuit. Remove the plugs from the ionization cable connected to the control unit and to the electrode. Now using a universal meter take a measurement between the ionization connection and the ground, now refit it part by part until a short-circuit takes place.
		Rectify the short-circuit and if necessary replace this part.
E 01	24 Volt short-circuit	Check the 24 Volt connection. Remove all plugs with 24 Volt connections such as: fan, pump, any three-port valve and 24 Volt plug to the connecting block.
		Check short circuit of disconnected components. Switch on power again to the control unit with the components disconnected. Reconnect the components, which have been checked and are working.
		Rectify the short-circuit or replace the short-circuited component.
E 02	No flame formation	Check the data in Error mode. Boiler data during error. 1 error = 02 2 operational status = 02 3 supply temp. = xx* 4 return temp. = xx* 5 kW burner = xx** 6 % pump = xx* * = variable value **= x 3451 = BTU/hr
1	No temperature difference between supply (3) and return (4)	Boiler has not been able to ignite any gas or has not received any gas. Boiler tries to start 6 times with an increasing starting load after the safety time Check whether: - the gas valve is open; - there is power to the gas valve; - that the gas valve opens The minimum gas pre-pressure during the start must be a minimum of 7"W.C. (17 mbar), check the 24 Volts in the gas during ignition block's open position
2	There is a temperature difference between supply (3) and return (4)	Boiler has gone out after ignition. Due to insufficient ionization the burner has gone out after ignition Ionization flow, ionization cable or the O_2 setting. The minimum ionization current should be 4 µA, the O_2 should be a minimum of 4.4% for NG or 4.8% for LP
E 03	Control unit error	Connector not plugged into the gas valve or defect in the wiring of the gas valve.
		Software error control unit. Replace the control unit. The display will automatically load the program into the new controller.
E 04	The controller has detected a program error	Reset the boiler. the boiler automatically indicates this message if during an error read-out the electrical power to the boiler is shut off. After the power has once again switched on, if the error causing the interference is no longer present, this message is given.
		Rectify the preceding error, If Error 04 persists, and preceding errors do not occur, replace controller.
E 05	Control unit error	Check 120V stability. If voltage is deviating more between +10% and -15% the electrical power supply needs to stabilised.
	The error persists after reset	Software error control unit. Replace the control unit. Remove the E-Prom from the defective control unit and place it onto the new control unit .The controller will automatically load the program into the new control unit.
E 06	Control unit error	Moisture on the PCB. Check if there is water leaking on or in the boiler.
		Stop leak and replace MCBA controller

Code	Description	Solution
E 07	Control unit error	
1	Anticipation resistance wire not present	When a power stealing room stat device is placed the connection terminal needs to be provided with the special anticipation resistance wire.
2	Software error control unit.	Software error control unit. Replace the control unit. Remove the E-Prom from the defective control unit and place it onto the new control unit .The controller will automatically load the program into the new control unit.
E 12	High limit stat open	Supply temperature too high. Caused by - presence of air - possible polluted impeller of the circulation boiler pump - polluted internal filter
		Check de-aerator. Replace when necessary the automatic de-aerator and restart boiler for de-aerating programm (17min.)
		Check water flow over system. Clean when necessary the pump and or filter. Flush complete system
		Check adjustment of balancing valves
E 13	Control unit error	Software error control unit. Replace the control unit. Remove the E-Prom from the defective control unit and place it onto the new control unit .The controller will automatically load the program into the new control unit.
E 14	- T1 flow sensor ground connection - T1 flow sensor failure - controller failure	Check the data in Error mode. Boiler data during error: 1 Error = 14 2 Operational status = 00 3 Flow temp. = -22 4 Return temp. = xx* 5 kW burner = 00** 6 % pomp = xx* * = variable values **= x3415=BTU/hr
		A temperature of - 36 is displayed at position 3. Check the wiring and/or measure the resistance of the flow sensor. The resistance should be approx. 12 kOhm at 77°F. (See table in Appendix B)
		If necessary, replace the flow sensor
		- check for resistance on 16 and 17 if using a 3rd part DHW control - if resistance is present on 16 and 17 with 3rd party control contacts on control are not fully open
E 18	Signal maximum flow water temperature exceeded (T_1 > 212°F).	Check actual flow temperature. suddenly increase caused by completely hydraulic shut off of the boiler (filter, pump, thermostat valve, service valve)
		Check flow sensor NTC1. measure the resistance value (see Appendix B)
		Exchange defective part if necessary. Change control unit when error persists.
E 19	Signal maximum return water temperature exceeded (T_2>212°F).	Check actual return temperature. Increase of temperature caused by external heating source?
		Check return sensor NTC 2. Measure the resistance value (see Appendix B)
		Exchange defective part if necessary. Change control unit when error persists
E 24	T1 and T2 (swapped).	T2 temperature is measured to be higher than T1. Check resistance value of T1 and T2 (See Appendix B) and replace T1 or T2.
E 26	Controller failure	Replace controller

Code	Description	Solution
E 28	No signal from the fan	The fan is not running. Check the wiring to the fan and the control unit and/ or the 24 volt power supply to the fan
		Wiring and voltage are OK and error is repeated. Replace the fan
E 29	Negative pressure on vent system (pressure difference)	Check vent system. Vent system and air intake system must be installed according installation instructions.
		IF vent system is OK: Replace fan
E 31	internal shut down of supply sensor T1	Check the data in Error mode. Boiler data during error: 1 Error = 31 2 Operational status = 00 3 Flow temp. = 230 4 Return temp. = xx* 5 kW burner = 00** 6 % pomp = xx* * = variable values **= x3415=BTU/hr
		Check the wiring. check the wiring for the sensor
		The wiring is OK but the error is repeated. Remove the plug from the flow sensor as a result of which Error 36 occurs
		Replace the sensor.
E 32	Shut down of return sensor T2	Check the data in Error mode. Boiler data during error: 1 Error = 32 2 Operational status = 00 3 Flow temp. = xx* 4 Return temp. = 230 5 kW burner = 00** 6 % pomp = xx* * = variable values **= x3415=BTU/hr
		Check the wiring. check the wiring for the sensor
		The wiring is OK but the error is repeated. Remove the plug from the flow sensor as a result of which Error 37 occurs
		Replace the sensor.
E 36	contact for supply sensor T1 open	Check the data in Error mode. Boiler data during error: 1 Error = 36 2 Operational status = 00 3 Flow temp. = -22 4 Return temp. = xx* 5 kW burner = 00** 6 % pomp = xx* * = variable values **= x3415=BTU/hr
		Check the wiring. check the wiring for the sensor
		The wiring is OK but the error is repeated. Remove the plug from the flow sensor as a result of which Error 31 occurs
		Replace the sensor.

Code	Description	Solution
E 37	contact for return sensor T2 open	Check the data in Error mode. Boiler data during error: 1 Error = 37 2 Operational status = 00 3 Flow temp. = xx* 4 Return temp. = -22 5 kW burner = 00** 6 % pomp = xx* * = variable values **= x3415=BTU/hr
		Check the wiring. check the wiring for the sensor
		The wiring is OK but the error is repeated. Remove the plug from the flow sensor as a result of which Error 32 occurs
		Replace the sensor.
E 41	Control unit error	Software error control unit. Replace the control unit. Remove the E-Prom from the defective control unit and place it onto the new control unit .The controller will automatically load the program into the new control unit.
E 42	Control unit error	Software error control unit. Replace the control unit. Remove the E-Prom from the defective control unit and place it onto the new control unit .The controller will automatically load the program into the new control unit.
E 44	Electrical leakage to ground.	Moisture on controller PCB. Check if there is water leaking on or in the boiler.
		Stop water leak and replace controller.
E 69	No software present	Remove the E-Prom from the defective control unit and place it onto the new control unit .The controller will automatically load the program into the new control unit.
E 80	Flue gas temperature to high (adjustment parameter 84 - default 212°F)	Replace flue sensor or adjust parameter 84 to default
FUSE	Fuse on controller PCB defective or Cable transformer not connected	Replace fuse. A 4A and 5A spare fuse can be found on the back side of the Control Tower.

16.4 Other Errors

Complaint	Description	Solution
Central heating but no domestic hot water	1. -Key of the DHW program is not switched on	Switch on DHW program on the Control Tower
	32. T3 DHW sensor in external cylinder defective	Replace DHW sensor
	4. When using RS100	- Check timer times for DHW program, if necessary reset - RS100 does not respond to DHW program - See RS100 installation instructions
	5. Three-port valve is not circulating to DHW	- Check wiring. - If necessary replace the three-port valve motor.
Hot water but no central heating	1. -Key of the central heating program is not switched on.	Switch on central heating program
	2. Room thermostat (on/off) is not giving any signal to the boiler.	Check room thermostat
	3. RS100 with outdoor sensor (Room sensor-On)	- Outdoor temperature is higher than 70°F, depending upon the Eco-temperature set (70°F is the default). Check Info chapter Step 7 or temperature is higher than the Eco temperature set (see RS100 installation instructions). - Check timer program and set room temperature.
	4. Three-port valve is not circulating to central heating position.	Check wiring, replace the three-port valve motor.
Central heating installation gets hot without being requested	1. -Key pump program is on.	Switch off.
	2. Dirt in three-port valve or three-port valve cartridge is binding.	Clean or replace.
radiators do not get hot enough or warming them up takes too long	1. Check setting of room thermostat or RS100	See installation and user manual RS100
	2. Supply water temperature too low.	Check setting PARA chapter Step No. 1 and increase if necessary
	3. Incorrect choice of installation	PARA chapter Step No. 2 if necessary change.
	4. Installation resistance too high (given an average T > 36°F the boiler decreases the load).	- See installation instructions. - Check / clean water filter check dimensions of pipes.

Parts casing and rear wall E-Series

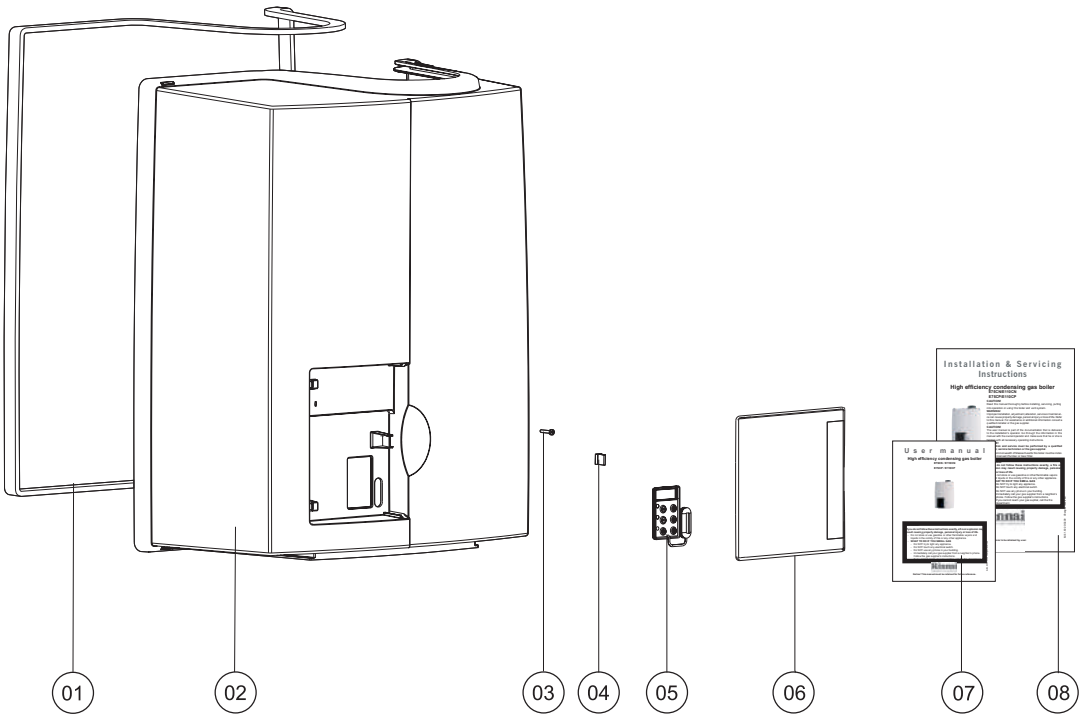

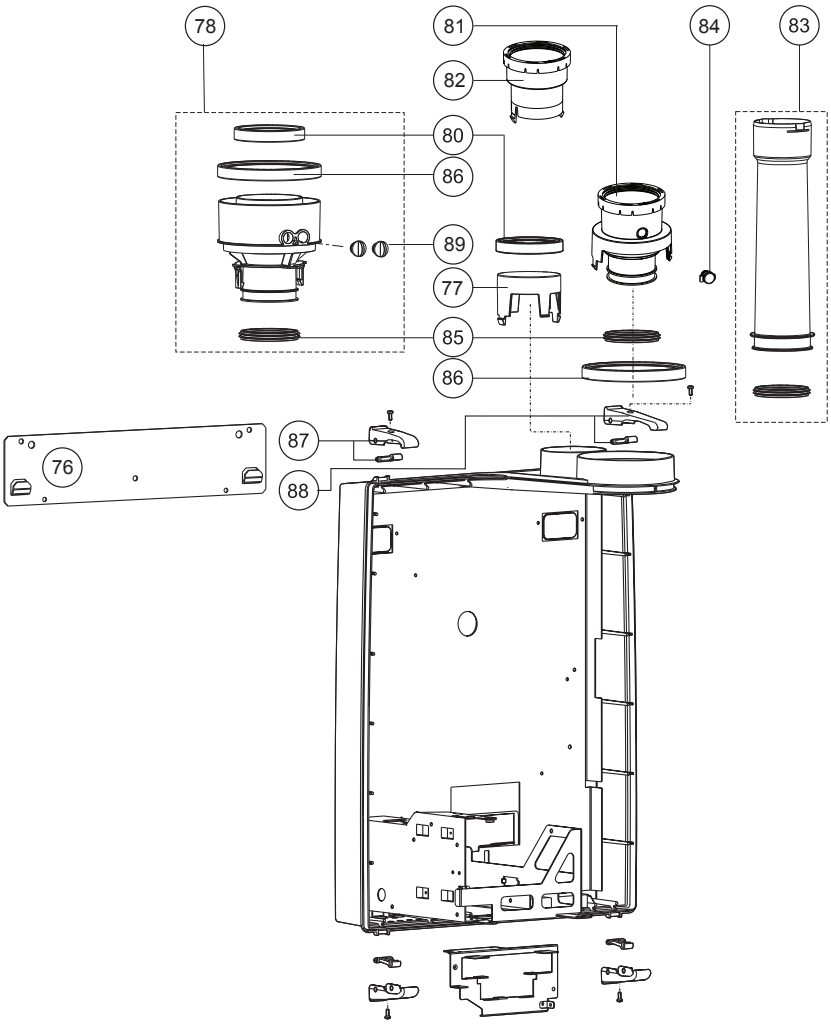

Item	Description	Rinnai Part Number	E60SRN E60SRP		E85SRN E85SRP		E110SRN E110SRP	
			N	P	N	P	N	P
			OSS1		OSS1		OSS2	
1	GASKET CASING E	809000073	X	X	X	X	X	X
2	CASING SET	809000074	X	X	X	X	X	X
3	BOILER COVER BOLT M5X20 (SET OF 5 BOLTS)	809000127	X	X	X	X	X	X
4	SPRING DOOR CASING	809000075	X	X	X	X	X	X
5	GASKET CONTROLS	809000076	X	X	X	X	X	X
6	DOOR CASING E	809000077	X	X	X	X	X	X
7	USER MANUAL E-SERIES	800000012	X	X	X	X	X	X
8	INSTALLATION MANUAL E-SERIES	800000013	X	X	X	X	X	X
76	BRACKET E75C, E110C, Q85S & Q130S	809000065	X	X	X	X	X	X
77	COVER AIR SUPPLY Ø80mm	807000075	X	X	X	X	X	X
78	CONCENTRIC FLUE ADAPTOR 80/125"MM	808000023	X	X	X	X	X	X
80	GASKET AIR INTAKE ø80 SHR	809000047	X	X	X	X	X	X
81	FLUE GAS CONNECTOR 3"	808000030	X	X	X	X	X	X
82	AIR INTAKE CONNECTOR 3"	808000031	X	X	X	X	X	X
83	FLUE GAS PIPE OSS1	808000032	X	X	X	X		
	FLUE GAS PIPE OSS2/3/4	808000033					X	X
84	PLUG MEASURING POINT PARALLEL FLUE PIPE	808000028	X	X	X	X	X	X
85	GASKET FLUE GAS PIPE PP OSS1	808000034	X	X	X	X		
85	GASKET FLUE GAS PIPE PP OSS2/3/4	809000048					X	X
86	GASKET AIR SUPPLY ø125mm	809000049	X	X	X	X	X	X
87	QUICK RELEASE SMALL E	809000078	X	X	X	X	X	X
88	QUICK RELEASE LARGE E	809000079	X	X	X	X	X	X
89	PLUG MEASURING POINT CONCENTRIC FLUE PIPE	808000030	X	X	X	X	X	X

Parts heat exchanger E-Series

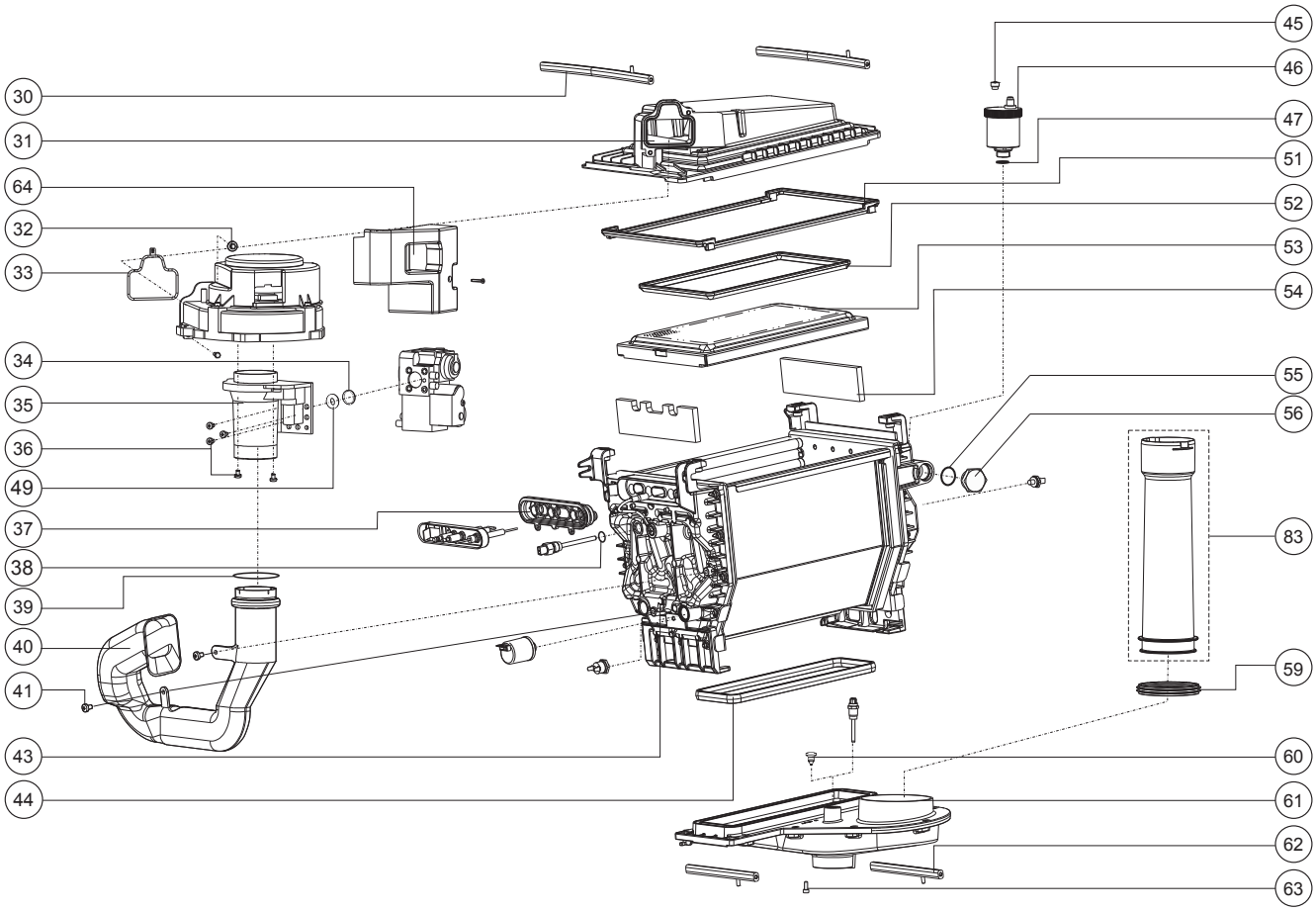

Item	Description	Rinnai Part Number	E60SRN E60SRP		E85SRN E85SRP		E110SRN E110SRP	
			N	P	N	P	N	P
			OSS1		OSS1		OSS2	
30	CLAMP BAR TOP PART H.EX. LONG	809000014	X	X	X	X	X	X
31	TOP PART HEAT EXCH. SET OSS1	807000010	X	X	X	X		
	TOP PART HEAT EXCH. SET OSS2	807000011					X	X
32	BOLT M 5X16 (5 PER PACKAGE)	809000015	X	X	X	X	X	X
33	GASKET FAN/TOP PART H.EX.	809000016	X	X	X	X	X	X
34	GASKET GAS VALVE - VENTURI	809000017	X	X	X	X	X	X
	GASKET VENTURI - FAN	809000018	X	X	X	X	X	X
35	VENTURI OSS1	807000013	X	X	X	X		
	VENTURI OSS2	807000014					X	X
36	BOLT M5X12GR FASE ZSDIN7985 (5 PER PACKAGE)	809000019	X	X	X	X	X	X
38	O-RING ø5,00X2,00 FLOW SENSOR (5 PER PACKAGE)	809000080	X	X	X	X	X	X
37	GASKET IONISATION/IGNITION OSS	809000020	X	X	X	X	X	X
39	GASKET SILENCER-VENTURI	809000021	X	X	X	X	X	X
40	DAMPER OSS1	807000016	X	X	X	X		
	DAMPER OSS2	807000017					X	X
41	SCREW TAPTITE M5X8 CK-PD (3 PER PACKAGE)	809000022	X	X	X	X	X	X
43	HEAT EXCHANGER OSS1 ASME	807000019	X	X	X	X		
	HEAT EXCHANGER OSS2 ASME	807000020					X	X
	BOILER TOOL KIT	809000024	X	X	X	X	X	X
44	GASKET CONDENSATE TRAY OSS1	809000025	X	X	X	X		
	GASKET CONDENSATE TRAY OSS2	809000026					X	X
45	CAP DE-AERATOR SHR (3 PER PACKAGE)	807000023	X	X	X	X	X	X
46	DE-AERATOR CHROME	807000024	X	X	X	X	X	X
47	O-RING ø13,94X2,62 DE-AER. (2 PER PACKAGE)	809000028	X	X	X	X	X	X
51	GASKET H.E./TOP PART OSS1	809000030	X	X	X	X		
	GASKET H.E./TOP PART OSS2	809000031					X	X
52	GASKET BURNER/TOP PART OSS1	809000033	X	X	X	X		
	GASKET BURNER/TOP PART OSS2	809000034					X	X
53	BURNER CASSETTE SET OSS1	806000010	X	X	X	X		
	BURNER CASSETTE SET OSS2	806000011					X	X
54	SET INSOLATION PIPE PLATE L+R	809000036	X	X	X	X	X	X
55	O-RING ø17,12X2,62 PLUG HEATEXCH. (3 PER PACKAGE)	809000103	X	X	X	X	X	X
56	METAL PLUG HEAT EXCH 1/2"	809000115	X	X	X	X	X	X
59	LIP-RING ø63 AMGAS	809000038	X	X	X	X		
	LIP-RING ø80 AMGAS	809000039					X	X
60	PLUG FLUE GAS SENSOR	809000040	X	X	X	X	X	X
61	CONDENSATE TRAY OSS1	809000041	X	X	X	X		
	CONDENSATE TRAY OSS2	809000042					X	X
62	CLAMP BAR COND.TRAY	809000044	X	X	X	X	X	X
63	BOLT M 5X12 IMBUS VERZ. (3 PER PACKAGE)	809000045	X	X	X	X	X	X
64	COVER GAS VALVE	809000046	X	X	X	X	X	X

Parts pipes E-Series

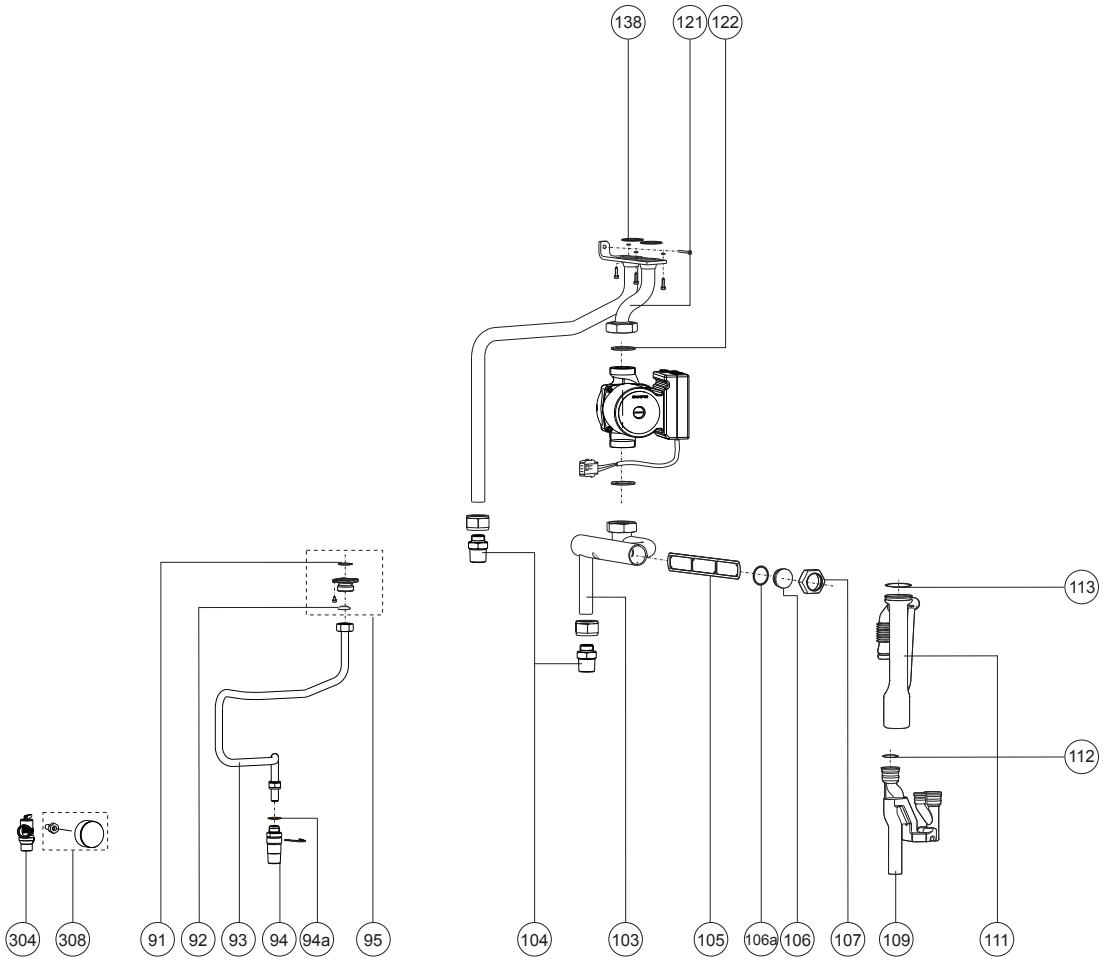

Item	Description	Rinnai Part Number	E60SRN E60SRP		E85SRN E85SRP		E110SRN E110SRP	
			N	P	N	P	N	P
			OSS1		OSS1		OSS2	
91	O-RING ø21.89X2.62 GASLINE	809000061	X	X	X	X	X	X
92	GASKET FITTING 3/4" GASV.	809000062	X	X	X	X	X	X
93	GAS PIPE E60S/E85S	806000020	X	X	X	X		
	GAS PIPE E110S	806000021					X	X
94	GAS FITTING OSS1/2 E	806000015	X	X	X	X	X	X
94a	O-RING ø13,94X2,62 YELLOW SILI Q	809000055	X	X	X	X	X	X
95	FITTING GAS VALVE 3/4"	806000016	X	X	X	X	X	X
103	PIPE RET. FILTER-PUMP E	807000128	X	X	X	X	X	X
104	CONNECTION SET 22 X 3/4" M-NPT	807000069	X	X	X	X	X	X
105	FILTER RETURN PIPE	807000029	X	X	X	X	X	X
106	FILTER CAP	807000031	X	X	X	X	X	X
106a	O-RING ø25,07 X 2,62 3WV	809000058	X	X	X	X	X	X
107	NUT M35 ø30	809000059	X	X	X	X	X	X
109	CONDENSATE COLLECTOR	809000081	X	X	X	X	X	X
111	TRAP - E SERIES	809000100	X	X	X	X	X	X
112	O-RING ø40X3,53 TRAP TRAY	809000084	X	X	X	X	X	X
113	O-RING ø18,72X2,62 EPDM (3 PER PACKAGE)	809000052	X	X	X	X	X	X
121	PIPE FLOW. E60S & E85S	807000129	X	X	X	X		
	PIPE FLOW. E110S	807000130					X	X
	BOLT M6X20 SS IMB.BP.4,2 (3 PER PACKAGE)	809000089	3X	3X	3X	3X	3X	3X
122	GASKET PUMP (2 PER PACKAGE)	809000056	X	X	X	X	X	X
138	O-RING ø29.74X3.53 FLOW/RET.(2 PER PACKAGE)	809000064	2X	2X	2X	2X	2X	2X
304	SAFETY VALVE 3/4" NPT	807000077	X	X	X	X	X	X
308	T&P GAUGE 1/4"NPT + LOCK 1/2"	807000081	X	X	X	X	X	X

Parts electrical components E-Series

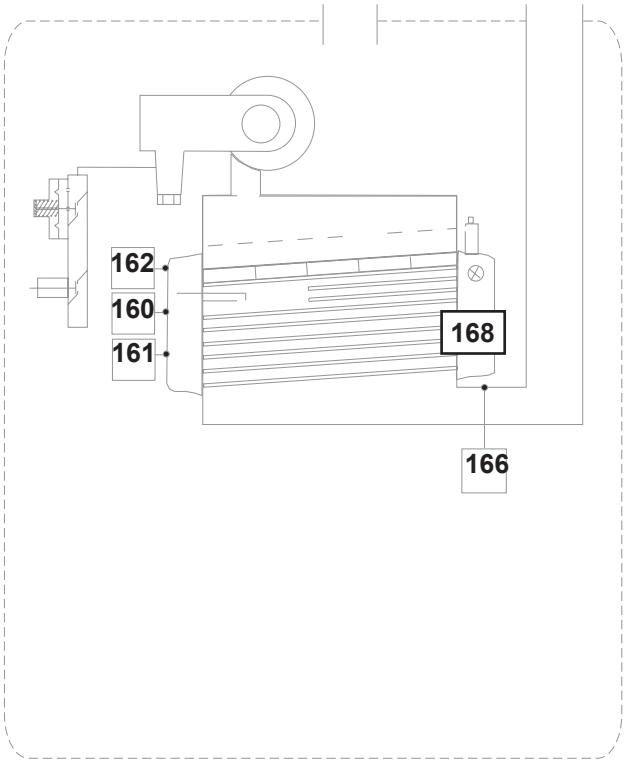

162	T1	supply sensor
160	T2	return sensor
166	T5	flue gas sensor
168	HLS	high limit switch
161	P1	water pressure sensor

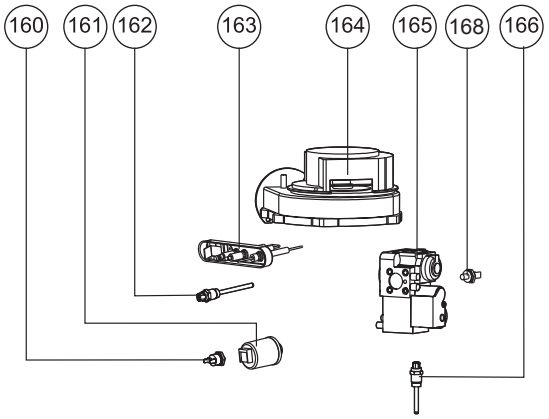

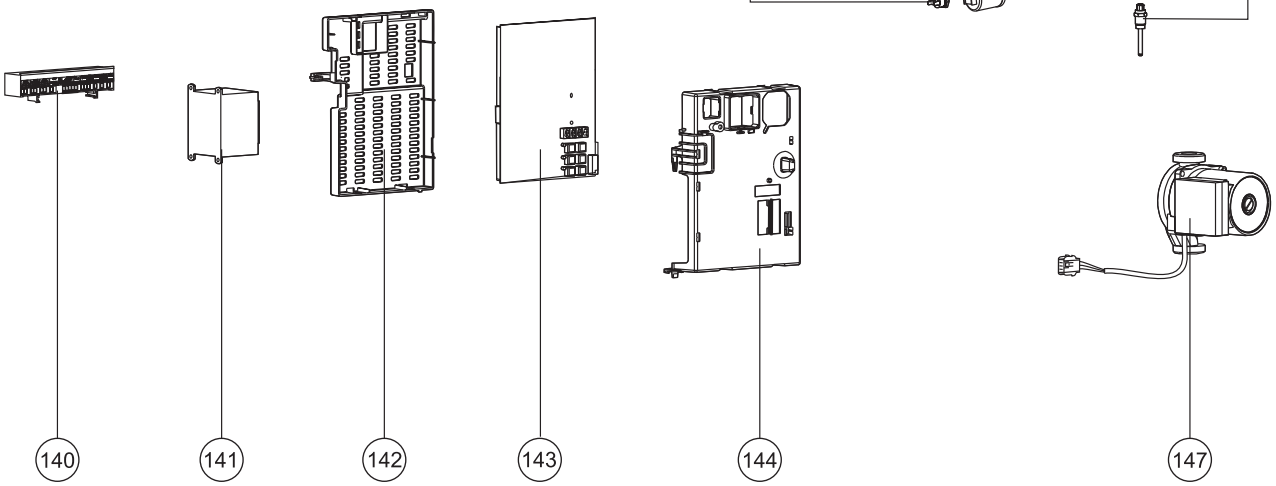

Item	Description	Rinnai Part Number	E60SRN E60SRP		E85SRN E85SRP		E110SRN E110SRP	
			N	P	N	P	N	P
			OSS1		OSS1		OSS2	
140	HARNESS E	805000041	X	X	X	X	X	X
	STICKER CONNECTION TERMINAL	805000046	X	X	X	X	X	X
	CONNECTOR 2-POLE PURPLE	805000015	X	X	X	X	X	X
	CONNECTOR 3-POLE GRAY	805000018	X	X	X	X	X	X
	CONNECTOR 4-POLE BROWN	805000021	X	X	X	X	X	X
	CONNECTOR 2-POLE BLACK	805000016	X	X	X	X	X	X
	CONNECTOR 6-POLE BLUE	805000022	X	X	X	X	X	X
141	TRAFO 120V/24V	805000010	X	X	X	X	X	X
	SCREW 3,5X 9,5 VERZ.D7983 (5 PER PACKAGE)	805000011	X	X	X	X	X	X
142	CASING CONTR.UNIT BACK E	809000093	X	X	X	X	X	X
143	CONTROL UNIT MCBA 5417 E RAC	805000025	X	X	X	X	X	X
	FUSE 5AF (3 PER PACKAGE)	805000026	X	X	X	X	X	X
	FUSE 4 AT (250v) (3 PER PACKAGE)	805000027	X	X	X	X	X	X
144	CASING CONTR.UNIT FRONT E	809000094	X	X	X	X	X	X
147	PUMP UPER 20-58 120V	807000126	X	X	X	X		
	PUMP UPER 20-78 120V	807000127					X	X
160	NTC T2/T3	805000032	X	X	X	X	X	X
161	WATERPRESSURE SENSOR	805000034	X	X	X	X	X	X
	WATER PRESSURE SENSOR CABLE	805000050	X	X	X	X	X	X
162	NTC T1/T3	805000035	X	X	X	X	X	X
163	IGNITION ELECTRODE+GASKET OSS	805000036	X	X	X	X	X	X
	IGNITION CABLE SHR	805000037	X	X	X	X	X	X
	IONISATION WIRE SHR	805000039	X	X	X	X	X	X
164	FAN NRG 118 OSS1/2	808000020	X	X	X	X	X	X
	HARNESS FAN 120V	805000038	X	X	X	X	X	X
165	GAS VALVE	806000019	X	X	X	X	X	X
168	HIGH LIMIT SWITCH	805000033	X	X	X	X	X	X
170	OUTDOOR RESET SENSOR ARV12	805000047	X	X	X	X	X	X

Parts conversion kits Propane and Natural gas E-Series

Propane Conversion Kit Parts				
		System		
Boiler type		E60SRN E60SRP	E85SRN E85SRP	E110SRN E110SRP
Gasket Gas valve - venturi	809000017	X	X	X
Gasket Fitting 3/4" Gas valve	809000062	X	X	X
EE-Prom E-Series		LPG 803000016 E60SRP	LPG 803000018 E85SRP	LPG 803000020 E110SRP
Gas Conversion Sticker		E60SRP	E85SRP	E110SRP
Conversion Kit label	8U340800	X	X	X
Conversion Kit Data Label		E60SRP	E85SRP	E110SRP
Instructions Sheets Conversion Kit	8U6059xx	X	X	X
Propane orifice diameter	inch / mm	0.16" / 4.15	0.16" / 4.15	0.20" / 5.2
Display indication at start-up		18 .P	25 .P	32 .P

Natural Gas Conversion Kit Parts				
		System		
Boiler type		E60SRN E60SRP	E85SRN E85SRP	E110SRN E110SRP
Gasket Gas valve - venturi	809000017	X	X	X
Gasket Fitting 3/4" Gas valve	809000062	X	X	X
EE-Prom E-Series		NAT 803000017 E60SRN	NAT 803000019 E85SRN	NAT 803000021 E110SRN
Gas Conversion Sticker		E60SRN	E85SRN	E110SRN
Conversion Kit label	8U340700	X	X	X
Conversion Kit Data Label		E60SRN	E85SRN	E110SRN
Instructions Sheets Conversion Kit	8U6079xx	X	X	X
Display indication at start-up		18 .1	25 .1	32 .1

18 Parts list vent system

Vent Products

Listed and Tested Vent Products for E50CR, E60SR, E75CR, E85SR, E110SR, E110CR, Q85S, QP85, Q130S, QP130, Q175S, Q175C and Q205S

Manufacturer	Type	Descriptions	Parts #
Heatfab	Concentric	DGV 3"/5" Conc Air Intake Tee 3"	DGV03TAD3
		DGV 3"/5" Conc X 12" Length	DGV03L12
		DGV 3"/5" Conc X 31" Length	DGV03L36
		DGV 3"/5" Conc Horz Term Adapter	DGV03HT
		DGV 3"/5" Conc Vert Term Adapter	DGV03VT
	Twin Pipe	Rain Cap	SGV300
		3"- Adapter to fit into 80 mm Flue Collar	adapter
		3"- 12 Length	SGV302
		3"- 31" Length	SGV307
		3"- 90 Deg Tr Elbow	SGV314
		3"- Screen Termination	SGV392
		3"- Round Wall Thimble Pate	SGV393
		3"- Tall Cone Flashing, Flat- 2/12 Pitch	SGV3TCF

Manufacturer	Type	Descriptions	Parts #
IPEX		Concentric Vent Termination	1CT0303
		PVC - FGV Concentric Kit	196006
		PVC - FGV Wall Termination Kit	81219
		CPVC - FGV Concentric Vent Kit	197009
		Termination Vent Screen	196051

Manufacturer	Type	Descriptions	Parts #
Simpson Dura-Vent		3" (76mm) SS flexible lining system	3SFLEX-XX 294590
		3" (76mm) FasNSeal Flex-to-FasNSeal Adapter female	304003
		3" (76mm) FasNSeal-to-FasNSeal Adapter Flexible male	304103
		80mm to 3" Appliance Adapter	FSA-80MM3
		Vertical termination	300325
		3" (76mm) Bend 90 Degree	300160
		3x5 AL294C Concentric (12" Straight Pipe)	35CVS-12
		3x5 AL294C Concentric (36" Straight Pipe)	35CVS-36
		3x5 AL294C Concentric (48" Staight Pipe)	35CVS-48
		3x5 AL294C Concentric (90° Elbow)	35CVS-E90
		3x5 AL294C Concentric (45° Elbow)	35CVS-E45
		3x5 AL294C Concentric (Wall Strap)	35CVS-WS
		3x5 AL294C Concentric (Horizontal Cap)	35CVS-HC
		3x5 AL294C Concentric (Vertical Cap)	35CVS-VC
		3x5 Sealed Combustion 6" Vent Length	SC-0603
		3x5 Sealed Combustion 12" Vent Length	SC-1203
		3x5 Sealed Combustion 18" Vent Length	SC-1803
		3x5 Sealed Combustion 24" Vent Length	SC-2403
		3x5 Sealed Combustion 36" Vent Length	SC-36-3
		3x5 Sealed Combustion Adjustable Vent Length	SC-AVL3
		3x5 Sealed Combustion 94° Elbow	SC-94033
		Wall Kit (w/Cap)	FSSCWMK35
		Roof Kit (w/cap)	FSSCTRK35

Manufacturer	Type	Descriptions	Parts #
DuraVent (PolyPro)	Twin Pipe Termination	2" (60 mm) Twin Pipe Termination	2PPS-HTP
		3" (80 mm) Twin Pipe Termination	3PPS-HTP
	Single Horizontal Termination	2" (60 mm) Single Pipe Term	2PPS-HST
		3" (80 mm) single Pipe Termination	3PPS-HST
	Horizontal Termination Kit (Concentric)	2"X4" (60X100 mm) Horizontal Termination Kit (Concentric)	2PPS-HK
		3"X5" (80X125 mm) Horizontal Termination Kit (Concentric)	3PPS-HK
		4"X6" (100X150 mm) Horizontal Termination Kit (Concentric)	4PPS-HK
	Vertical Termination Cap Kit - Concentric	2"X4" (60X100 mm) Vertical Termination Cap Kit - Concentric	2PPS-VK
		3"X5" (80X125 mm) Vertical Termination Cap Kit - Concentric	3PPS-VK
		4"X6" (100X150 mm) Vertical Termination Cap Kit - Concentric	4PPS-VK
	Flex Chimney Lining Kit	2" (60 mm) Flex Chimney Lining Kit	2PPS-FK
		3" (80 mm) Flex Chimney Lining Kit	3PPS-FK
		4" (100 mm) Flex Chimney Lining Kit	4PPS-FK
	Flex Pipe	2" (60 mm) Flex Pipe	2PPS-FLEX XX
		3" (80 mm) Flex Pipe	3PPS-FLEX XX
		4" (100 mm) Flex Pipe	4PPS-FLEX XX
	90° Elbow	2" (60 mm) 90° Elbow	2PPS-E90
		3" (80 mm) 90° Elbow	3PPS-E90
		4" (100 mm) 90° Elbow	4PPS-E90
	45° Elbow	2" (60 mm) 45° Elbow	2PPS-E45
		3" (80 mm) 45° Elbow	3PPS-E45
		4" (100 mm) 45° Elbow	4PPS-E45
	Single-Wall Pipe	2" (60 mm) Single-Wall Pipe-12" long	2PPS-12
		3" (80 mm) Single-Wall Pipe-12" long	3PPS-12
		4" (100 mm) Single-Wall Pipe-12" long	4PPS-12
		2" (60 mm) Single-Wall Pipe-36" long	2PPS-36
		3" (80 mm) Single-Wall Pipe-36" long	3PPS-36
		4" (100 mm) Single-Wall Pipe-36" long	4PPS-36
		2" (60 mm) Single-Wall Pipe-72" long	2PPS-72
		3" (80 mm) Single-Wall Pipe-72" long	3PPS-72
		4" (100 mm) Single-Wall Pipe-72" long	4PPS-72

Manufacturer	Type	Descriptions	Parts #
Rinnai/ Ubbink		1 Meter Sections of PP/PVC, 3”/5”	224080
		90 Degree, Male x Female, PP/PVC, 3”/5”	224078
		Horizontal PP Termination, 21 inch	223175
		Vertical PP Termination	184162
		Condensing Raised Horizontal Termination Snorkel Kit	224047PP
		Condensing 45 Deg. Vent Pipe Elbow 2 pcs	224077PP
	Stainless Steel:	1 Meter Sections of SS/PVC, 3"/5"	224204SS
		90 Degree, Male x Female, SS/PVC, 3"/5"	224201SS
		Horizontal SS Termination, 21 inch	223178SS
		Vertical SS Termination	184221SS
Manufacturer	**Type**	**Descriptions**	**Parts #**
York International		3” PVC Concentric Vent Termination	1CT0303

Manufacturer	Type	Descriptions	Parts #
CentroTherm		3"/4" B-Vent Chimney Cover	IABC0304
		3"/5" B-Vent Chimney Cover	IABC0305
		3"/6" B-Vent Chimney Cover	IABC0306
		3"/7" B-Vent Chimney Cover	IABC0307
		3" Connector Ring	IANS03
		3" Support Clamp	IASC03
		3" Spacer	IASP03
		3" Screens PPs-UV Black	IASPP03
		3" Bird Screen SS	IASSS03
		3" Wall Plate Black	IAWP03B
		3" Wall Plate White	IAWP03W
		3" Twin Pipe to 3"/5" Concentric Adaptor	ICTC0335
		3" Base Support	ISBS0387
		3" Chimney Cover SS w/PPs-UV End Pipe	ISCM03
		3" Chimney Cover PPs-UV Black	ISCP03
		3" Chimney Cover SS w/SS End Pipe	ISCS03
		3" x 45 Elbow	ISEL0345
		3" x 87 Elbow	ISEL0387
		3" x 45 Elbow Long	ISELL0345
		3" x 45° Elbow Long PPs-UV Black	ISELL0345UV
		3" x 87 Elbow Long	ISELL0387
		3" x 87° Elbow Long PPs-UV Black	ISELL0387UV
		3" x 87° Sweep Elbow	ISELR0387
		3" x 20" End Pipe PPs-UV Black	ISEP03
		3" x 39" End Pipe PPs-UV Black	ISEP0339
		3" Single Wall EDPM Gasket	ISGE03
		3" Horizontal Drain Tee	ISHDT03
		3" Low Profile Wall Termination	ISLPT0303
		3" Tee	IST03
		3" Test Port	ISTP03
		3" Termination Tee Long	ISTT0320
		3" x 12" Vent Length	ISVL031
		3" x 24" Vent Length	ISVL032
		3" x 24" Vent Length PPs-UV Black	ISVL032UV
		3" x 36" Vent Length	ISVL033
		3" x 39" Vent Length UV Black	ISVL0339UV
		3" x 72" Vent Length	ISVL036
		3"/5" Concentric Roof Termination PPs-UV	ICRT3539
		3"/5" Concentric Wall Termination PPs-UV	ICWT352
		3" to 2" Velocity Cone	ISVC0302

Miscellaneous		
	Terminal	General PVC 1120 3” SCH 40 DWV ASTM D 2665 900 Elbow
	Air Intake Pipe	PVC 1120 3” SCH 40 DWV ASTM D 2665
	Vent Pipe	PVC 1120 3” SCH 40 DWV ASTM D 2665

Vent Manufacturer Contact Information for Installation Instructions and Parts Lists:

Heat-Fab
Telephone: 800-772-0739
Fax: 413-863-4803
cystsvc@heat-fab.com
www.heatfab.com

IPEX
Telephone: 800-463-9572
905-403-0264
Fax: 905-403-9195
www.ipexamerica.com

Simpson Dura-Vent
Telephone: 518-463-7284
Fax: 518-463-5271
sales@duravent.com
www.protechinfo.com

Rinnai/Ubbink
Telephone: 800-621-9419
Fax: 678-829-1666
www.rinnai.us

York International
Telephone: 405-364-4040
877-874-7378
www.york.com/products/unitary/

CENTROTHERM Eco System
Telephone: 877-434-3432
Fax: 518-618-3166
info@centrotherm.us.com
www.centrotherm.us.com

R 25 °C	12 kΩ
R 100 ° C	950 Ω
$B_{25/85}$	3750 K
Temperature coefficient	-4,2 %/K

Temp [°C]	NTC [kOhm]
-30	171.70
-20	98.82
-10	58.82
0	36.10
10	22.79
20	14.77
25	12.00
30	9.81
40	6.65
50	4.61
60	3.25
70	2.34
80	1.71
90	1.27
100	0.95
110	0.73
120	0.56

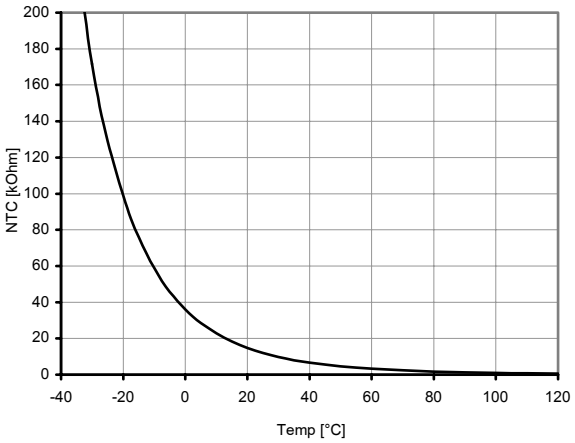

Temp °F	NTC 12K (12kΩ /77°F) supply sensor T1 return sensor T2 DHW sensor T3 outside sensor T4 flue gas sensor T5
-4	98,000
-0.4	90,000
3.2	82,000
6.8	74,000
10.4	66,000
14	58,000
17.6	53,500
21.2	49,000
24.8	45,000
28.4	40,500
32	36,000
35.6	33,500
39.2	30,900
42.8	28,200
46.4	25,600
50	23,000
53.6	21,400
57.2	19,900
60.8	18,100
64.4	16,600
68	15,000
71.6	14,000
75.2	12,900
78.8	11,900
82.4	10,850
86	9,800
89.6	9,100
93.2	8,500
96.8	7,900
100.4	7,200
104	6,500
113	5,600
122	4,600
131	4,000
140	3,400
158	2,300
176	1,700
194	1,300
212	950

Resistance table NTC-Sensors

B.1 Low Loss Header

Rinnai supplies optional for each type of boiler a Low Loss Header. Find below the dimensions.

Plumbing Kit 1
Part. no.: 804000061
Suitable for:
E60SRN / E60SRP
E85SRN / E85SRP
E110SRN / E110SRP

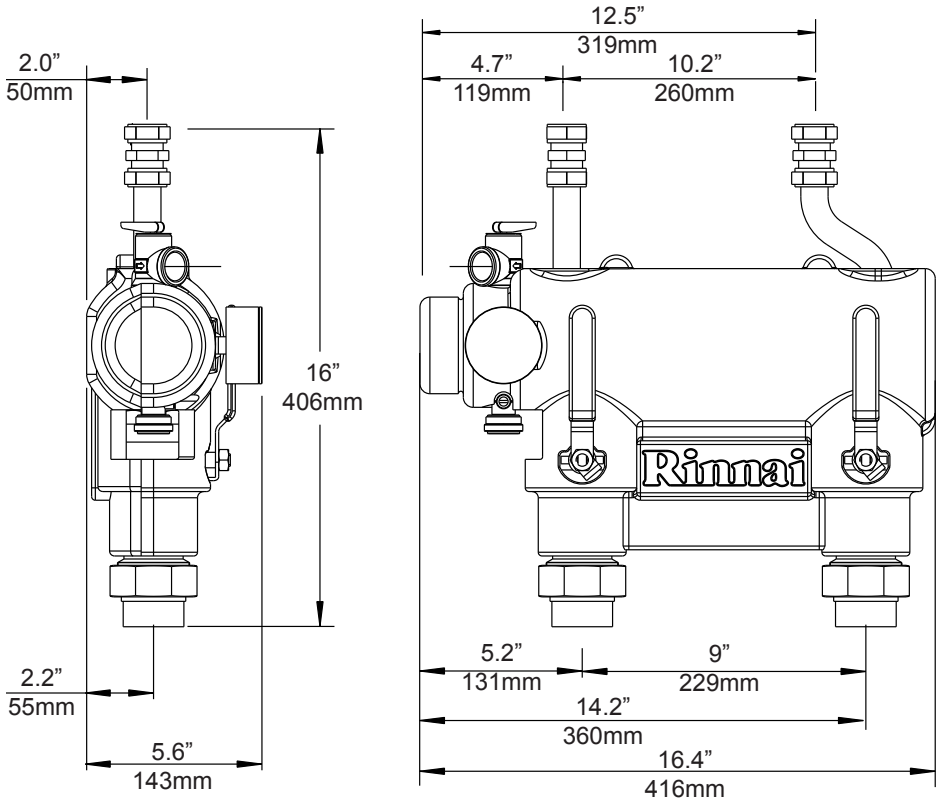

plumbing kit 1 figure 3

Low Loss Header
Clearances to combustible and non-combustible is 0 inch for sides, top, front and floor/ground
The recommended service clearance to the bottom from the low loss header is 12 inches.

NOTICE

The plumbing kit is not intended to support the weight of the piping. Appropriate piping supports should be used to support all attached piping to the boiler and plumbing kit.

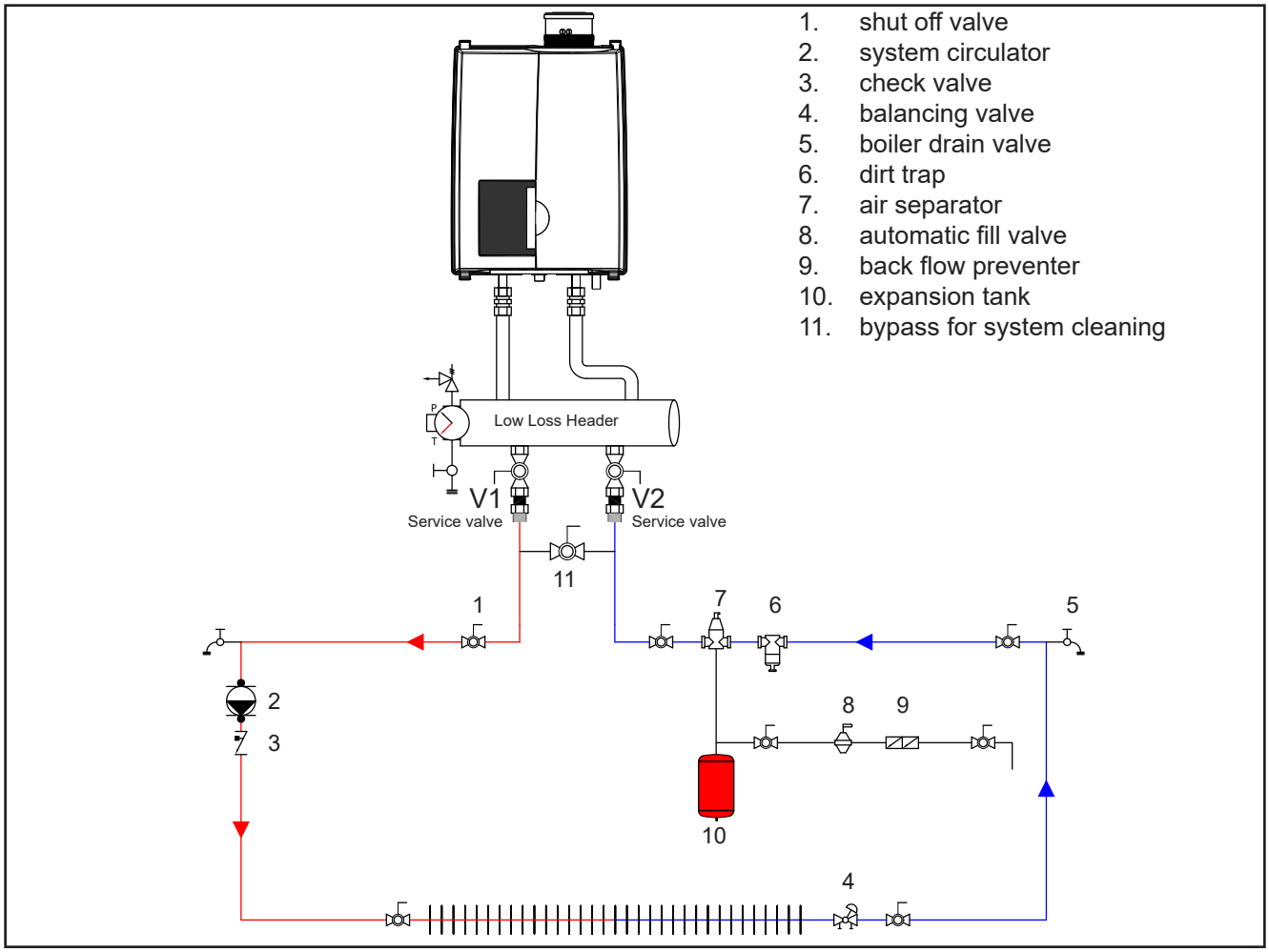

Boiler basic piping *fig. 5*

Compression fittings.

Parts:

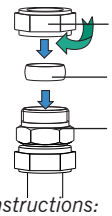

1. Nut

2. Ferrule

3. Fitting

Fitting instructions:

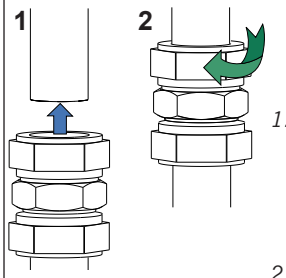

NOTICE

Clean pipe ends thoroughly. The outside surface has to be smooth before fitting.

1. Push the complete fitting over the pipe as far as possible. Ferrule should be over the pipe completely.

2. Turn the nut handtight clockwise.

3. Use 2 wrenches, one to hold the fitting on its place, the other for tighten the nut clockwise in 3/4 turn.

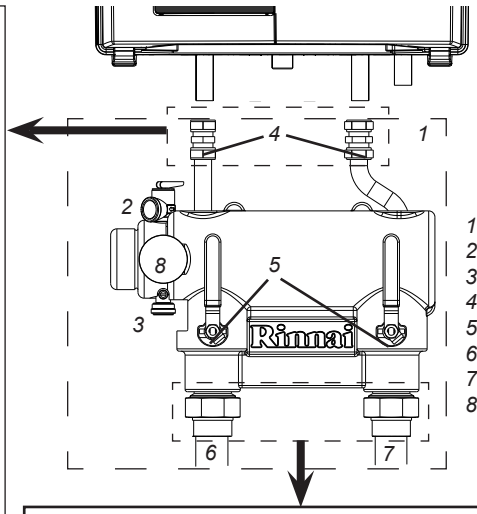

1. Plumbing kit
2. Safety valve
3. Drain and Purge connection
4. Bronze adapter fittings
*5. Service valves**
6. Flow 1 1/4"
7. Return 1 1/4"
*8. Pressure gauge**

WARNING **Do not overtighten these fittings when connecting flow and return pipe to the plumbing kit. Max. 150Nm / 100 foot-pounds (ft lb) / 1327 inch-pounds (in lb). Failure to follow these instructions may result in leakage causing property damage and would not be covered under warranty.**

NOTICE * After installation of the plumbing kit to the boiler the pressure gauge and both handles of the service valves must be mounted. Be sure the gauge is fitted leak free and that the handles are secured with the supplied nuts.

Plumbing Kit installation *fig. 6*

B.2 Side mounting kit for the Low Loss header

A side mounting kit for the low loss header is available as an accessory. This kit relocates the low loss header from directly below the boiler to the left side of the boiler only. The kit includes all the parts required to relocate the low loss header including all mounting brackets and material. This kit provides an alternative to for installations with height limitations and allows for an alternative piping installation.

Kit 1 for boiler models E60SR, E85SR and E110SR Rinnai part number: 804000071.

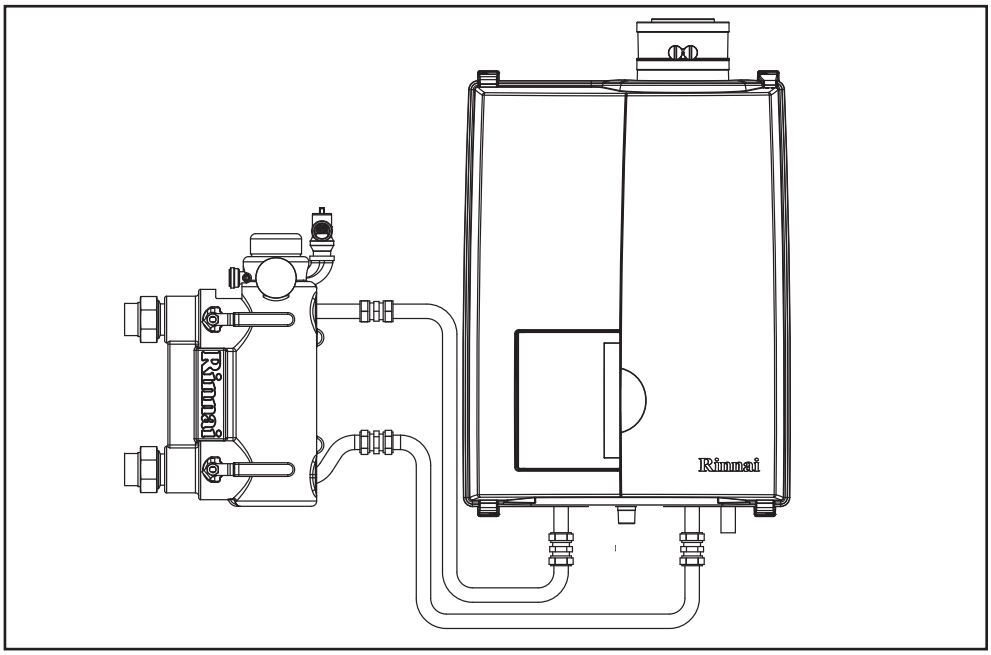

Appendix C - Approved system cleaners, inhibitors and antifreeze

The following is a list of approved system cleaners, inhibitors, and antifreeze.

Approved antifreeze:

- Rhomar RhoGard Mutli-Metal (AL safe)
- Noble Noburst AL
- Sentinel X500
- Fernox Alphi 11

Approved system cleaner:

- Noble Noburst Hydronic System Cleaner
- Rhomar Hydro-Solv 9100
- Fernox F3 Cleaner
- Sentinel X400

NOTICE

The system cleaners from NoBurst, Rhomar, and Fernox are NOT to be used in the boiler. The boiler must be closed off (valved off) from the rest of the system or not connected while the cleaners are in the system. The system should then be drained and then thoroughly flushed with clean water to remove all the system cleaner.

Approved inhibitors:

- Rhomar Pro-tek 922
- Noble Noburst AL inhibitor
- Sentinel X100

Rinnai®

EXPERIENCE OUR INNOVATION™

800000055 03/2016

Distributor for the USA
Rinnai America Corporate • 103 International Drive • Peachtree City, GA 30269
Toll Free: (800) 621-9419 • Tel: (678) 829-1700 • Fax: (678) 829-1666 • E-mail: info@rinnai.us • Internet: www.rinnai.us

This renewed publication cancels all previous installation instructions. The company reserves the right to change the specifications and dimensions without prior notice.

E. & O. E.