INSTALLATION INSTRUCTIONS

Axis Acrylic Shower Bases

MODELS 3232S, 3636A, 3838N, 3838A & 4242N

Certified to comply with CSA B-45.5-11/IAPMO Z124-2011

Thank you for selecting American Standard – the benchmark of fine quality for over 100 years. To ensure this product is installed properly, please read these instructions carefully before you begin. (Certain installations may require professional help.) Also be sure your installation conforms to local codes.

NOTE: READ INSTRUCTIONS COMPLETELY BEFORE PROCEEDING WITH INSTALLATION.

ROUGHING-INS:

Model: 3232S.ST3 Square Shower Base

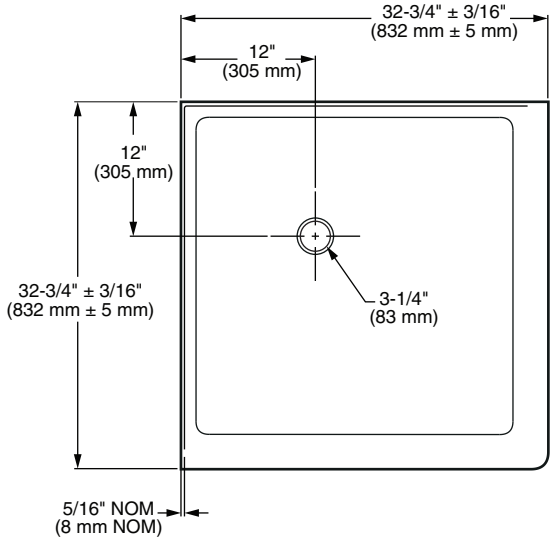

Model: 3636A.ST3 Rounded Shower Base

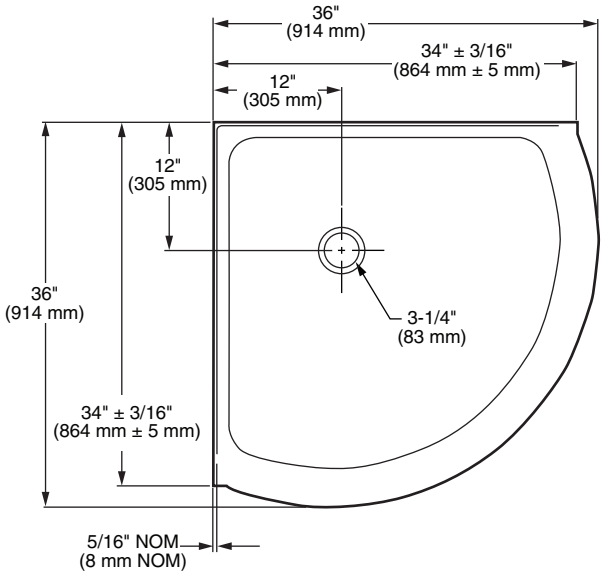

Model: 3838A.ST3 Rounded Shower Base

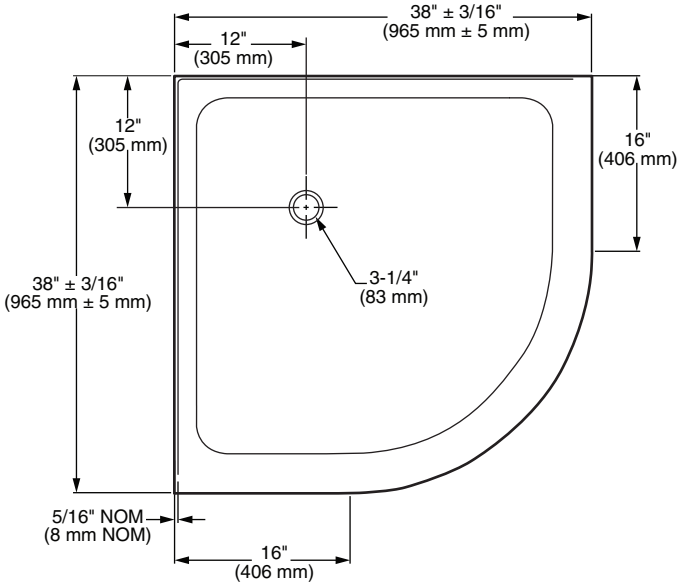

Model: 3838N.ST3 Neo Shower Base

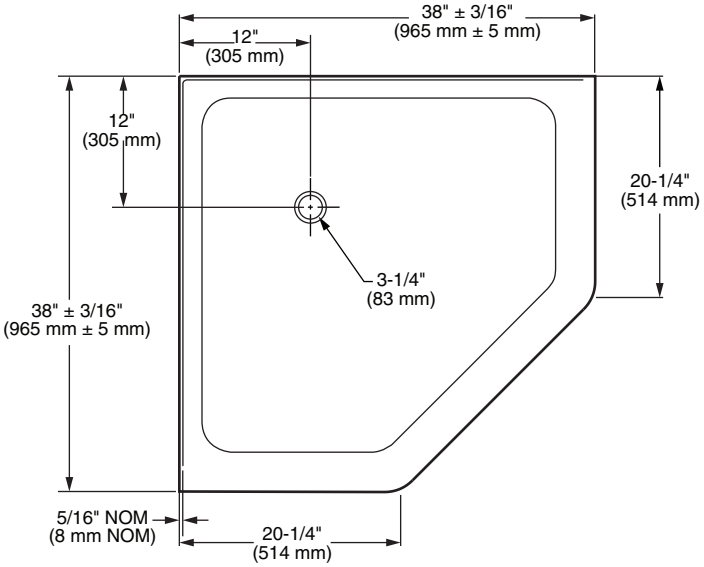

ROUGHING-IN CONTINUED ON NEXT PAGE

SAVE FOR FUTURE USE

Product names listed herein are trademarks of AS America Inc.
© AS America Inc. 2015

ROUGHING-IN: CONTINUED FROM PREVIOUS PAGE

Model: 4242N.ST3 Neo Shower Base

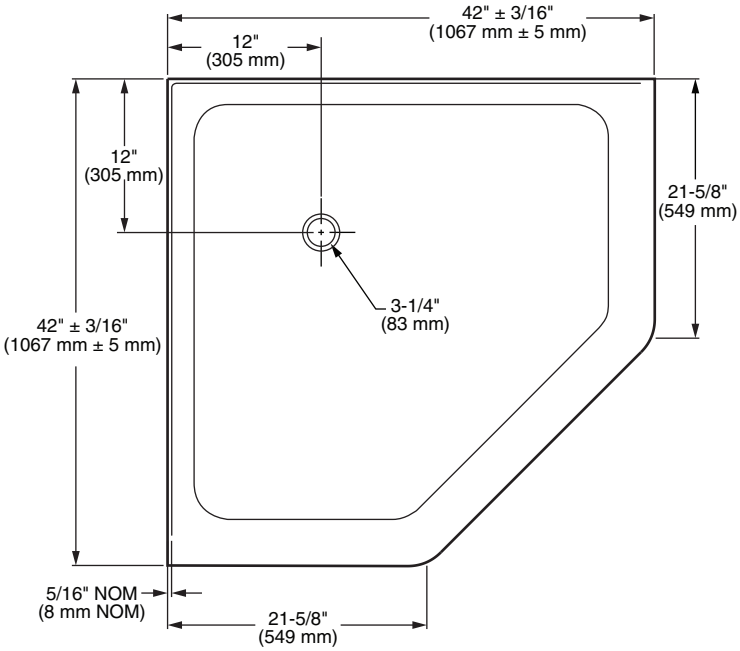

1

Ensure the floor and stud walls are square and plumb. Provide a 5" x 5" (127mm x 127mm) opening in the floor for the drain (see Fig. A). The drain plug accommodates a 2" (51mm) **PVC** waste pipe. The waste pipe should extend above the surface of the sub-floor 3/8" ± 1/16".

Note: Variations in levelness of subfloor may require adjustment of waste pipe height. See product drawings on this page for the specified drain locations.

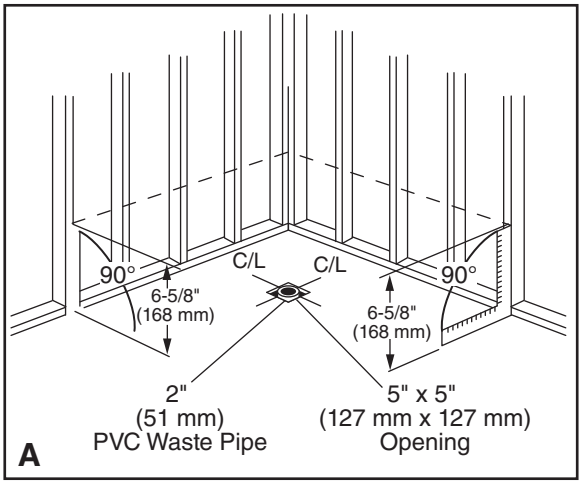

See Product Drawings above for Drain Location

2

Before installing drain into the shower base, remove strainer (see Fig. B). This will be installed after shower base is in its final position.

Install the drain to the shower base as shown in Fig. C. Use silicone sealant between drain body and shower base.

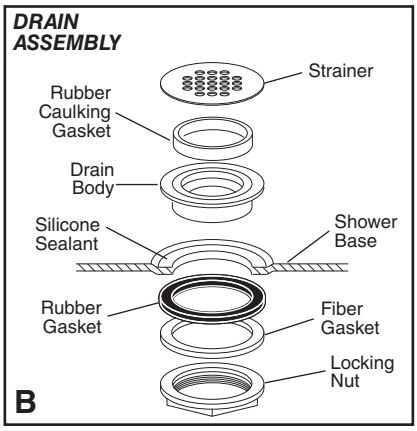

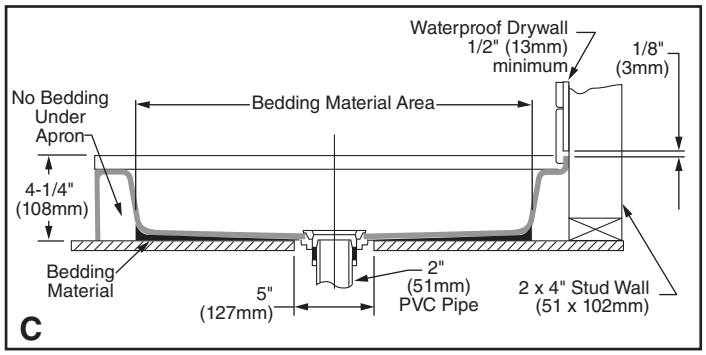

3

After leveling base on subfloor, use base to mark studs. This will be the installed height of shower base. Mix the low-shrink bedding material (grout, mortar, plaster, etc.). **Concrete is not recommended.** Apply enough bedding material to support the entire bottom of the shower base. **The bedding material must not be used under the apron (front edge).**

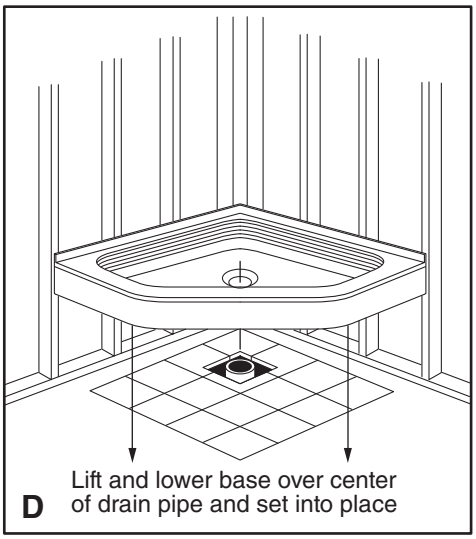

4 **After the bedding material has been poured and before it sets,** lower the shower base into position with the drain assembly sliding over the waste pipe as shown in Fig. D. It will be necessary to "rock" the shower base until the top of the tile flange aligns with the lines drawn in Step 3 on the stud walls. Make certain the apron is contacting the rough floor along the entire length of the shower base. Ensure that the base is level in two directions (see Fig. E). Snap strainer back into place and check for proper drainage.

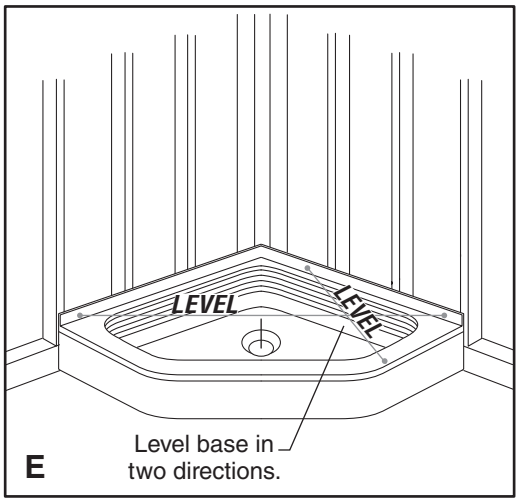

Note: Allow the bedding material to completely harden before applying weight to the bottom of the shower base.

5 Tape over the strainer to protect the finish and prevent construction debris from entering the drain.

Finish installation using Axis shower walls or as shown in Figure F.

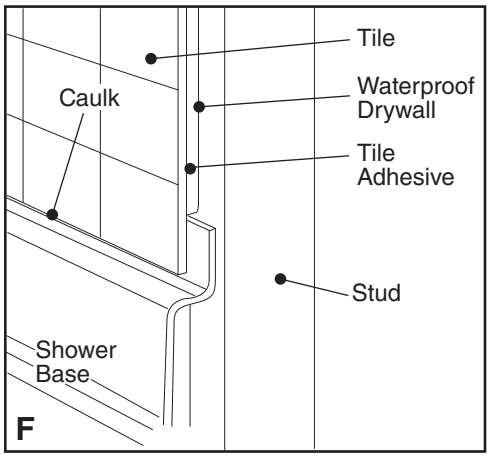

CLEANING AND MAINTENANCE

Your American Standard shower base is designed to last indefinitely with reasonable care and maintenance.

The high-gloss acrylic surface is resistant to impact and retains its luster with proper care and maintenance. An integral, slip-resistant surface is incorporated for user safety.

General Cleaning: Do not use abrasive cleaners; a mixture of warm water and a mild liquid detergent is adequate for most cleaning. **Strong detergents formulated for use on tile or porcelain-enamel surfaces should be avoided.**

Caution: Do not allow liquid detergent containers to remain on base surfaces for more than a few moments. Do not use Lestoil, Windex, Mr. Clean, Dow Disinfectant (spray or concentrate), or Lysol Basin, Tub and Tile Cleaner. Do not allow nail polish remover, dry cleaning fluid, acetone, paint remover, or other solvents to contact acrylic surface.

AS America, Inc. Limited Lifetime Warranty for Shower Bases

AS America, Inc. ("American Standard") warrants to the original consumer purchaser that it will, at its option, repair or replace this shower base – American Standard, in its sole judgment, to be defective under normal residential use and maintenance so long as it is owned by the original consumer purchaser.

To activate this limited warranty, the purchaser must go online to our website at www.americanstandard-us.com/warranty to register their shower base within thirty (30) days of purchase.

In no event will American Standard be liable for the cost of repair or replacement of any installation materials including but not limited to tile, marble, etc.

This limited warranty does not apply to Commercial Installations. The warranty for Commercial Installations is three (3) years.

This limited warranty DOES NOT COVER the following:

1. Defect or damages arising from shipping, installation, alterations, accidents, abuse, misuse, lack of proper maintenance and cleaning as directed in the Installation Instruction Manual and use of other than genuine American Standard replacement parts, in all cases whether caused by a plumbing contractor, service company, the owner or any other person.

2. Deterioration through normal wear and tear and the expense of normal maintenance.

3. Commercial application.

4. Options and accessories. American Standard's limited warranty on these items is **one year for parts only and excludes labor.** This one year limited warranty covers accessories manufactured by American Standard (e.g. aprons, drains, grab bars, heaters, trim kits) against defects of material or workmanship. Warranty coverage begins on the date the accessory was originally purchased by the owner.

5. Shipping cost for returning products for repairs or replacement under the limited warranty and labor or other cost incurred in connection with product removal or installation under this limited warranty.

6. ANY LIABILITY FOR CONSEQUENTIAL OR INCIDENTAL DAMAGES, ALL OF WHICH ARE HEREBY EXPRESSLY DISCLAIMED, OR THE EXTENSION BEYOND THE DURATION OF THIS LIMITED WARRANTY OF ANY IMPLIED WARRANTIES, INCLUDING THOSE OF MERCHANTABILITY OR FITNESS FOR AN INTENDED PURPOSE. (Some jurisdictions do not allow limitations on how long an implied warranty lasts, or the exclusion or limitation of incidental or consequential damages, so these limitations and exclusions may not apply to you.)

7. Responsibility for compliance with local code requirements. (Since local code requirements vary greatly, distributors, retailers, dealers, installation contractors and users of plumbing products should determine whether there are any code restrictions on the installation or use of a specific product.)

This limited warranty gives you specific legal rights. You may have other statutory rights that vary from state to state or from province to province, in which case this warranty does not affect such statutory rights.

For service under this warranty, it is suggested that a claim be made through the contractor or dealer from or through whom the product was purchased, or that a service request (including a description of the product model and of the defect) be sent to the following address:

In the United States:
American Standard Brands
P.O. Box 6820
Piscataway, New Jersey 08855
Attention: Director of Consumer Affairs

For residents of the United States, warranty information may also be obtained by calling the following toll free number: (800) 442-1902
www.americanstandard.com

In Canada:
AS Canada ULC
5900 Avebury Rd.
Mississauga, Ontario
Canada L5R 3M3

Toll Free: (800) 387-0369
www.americanstandard.ca

In Mexico:
American Standard B&K Mexico
S. de R.L. de C.
Via Morelos #330
Col. Santa Clara
Ecatepec 55540 Edo. Mexico

Toll Free: 01-800-839-1200
www.americanstandard.com.mx