BASCO®
SHOWER ENCLOSURES

INSTALLATION
INSTRUCTIONS

NEED INSTALLATION HELP?
Call 1-800-45-BASCO(452-2726)
Monday - Friday
8:00 A.M. - 4:30 P.M.
Eastern Time

UNIT No. 3400 & 3500
BATH ENCLOSURE

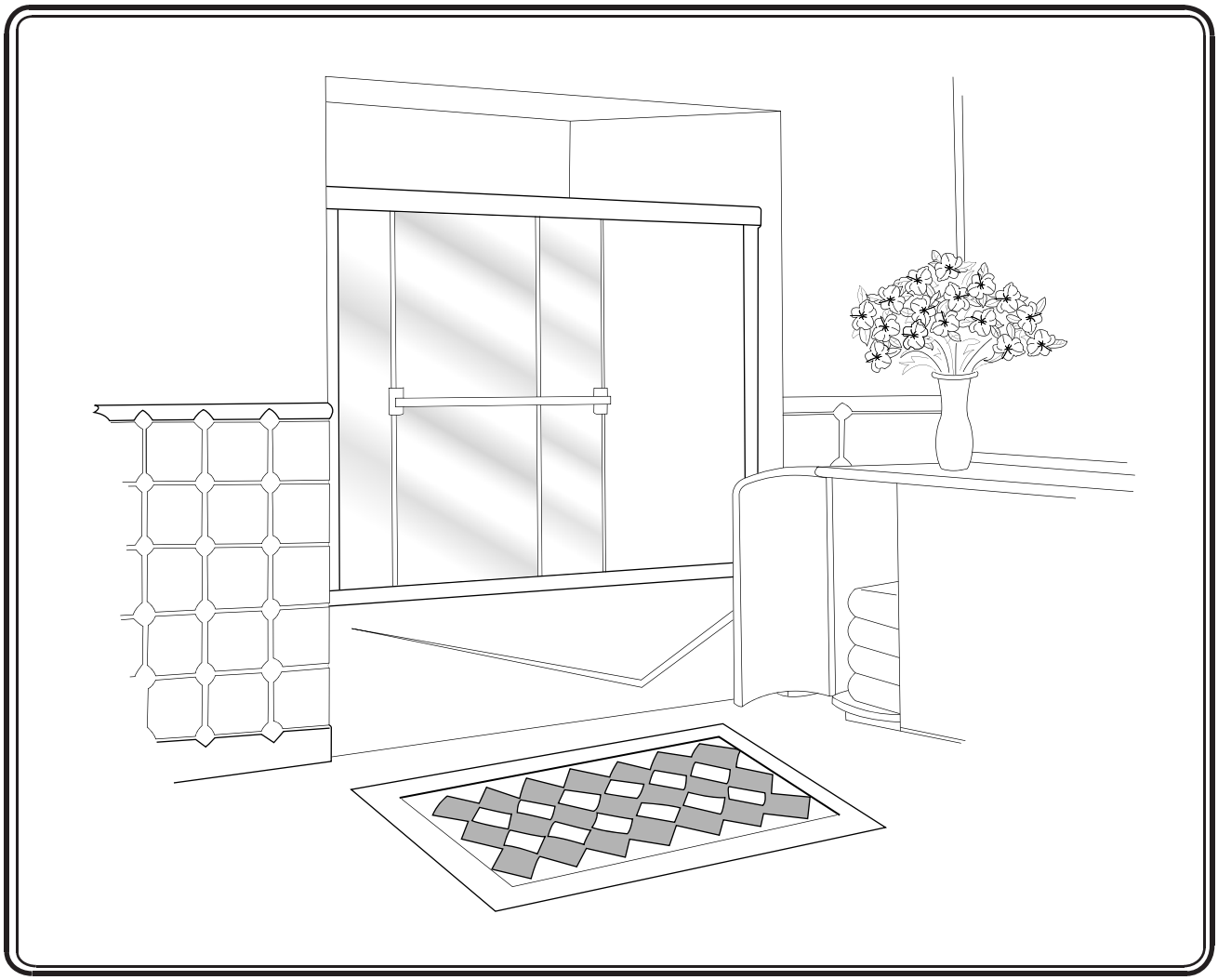

MAINTENANCE: Two primary materials are used to manufacture your new Basco enclosure: tempered glass and anodized aluminum. To assure a long lasting finish on the enclosure, wipe it down with a towel after each use. Never use a scouring agent to clean the aluminum.

For occasional, more concentrated cleaning efforts, we find that Lysol ***Bathroom Cleaner*** works extremely well. Be sure that any over spray falling on the aluminum frame is rinsed thoroughly and dried. Many over-the-counter cleaners, if applied to the aluminum and left on, will harm the metal finish and cause permanent damage, even though their directions indicate safe use on shower doors.

INSTALLATION NOTES: Unpack your unit carefully and inspect for freight damage. Lay out and identify all parts using the instruction sheets as a reference. Before discarding the carton, check to see that no small hardware parts have fallen to the bottom of the box. If any parts are damaged or missing, refer to the descriptions noted in the instructions when contacting your dealer for replacements.

Handle the glass panels carefully and protect the edges.

For drilling tile a 3/16" masonary bit is recommened.
Please wear safety glasses whenever drilling or cutting. When drilling holes in the ceramic tile or marble, use a center punch and hammer to carefully break the surface glaze so the drill can start without skidding.

To install your BASCO Bath Enclosure you will need the following: tape measure, level, #2 Phillips screwdriver, flat screwdriver, drill, 1/8", 7/64" and 3/16" drill bits, hacksaw, pencil and caulking (clear silicone recommended). Optional tools include a miter box for cutting parts to length, files, center punch, and masking tape.

NOTE: Before beginning installation, check the tub rim for level and both walls for plumb. If either are off more than 1/4" to 3/8", you may want to contact your dealer for tapered fillers which can be used to level the tub track or plumb the wall jambs.

NOTE: Tempered glass cannot be cut.

Although safety tempered glass is very resistant to breakage, the glass can still break if unequal pressure is placed on it during installation. Use caution. In addition, the sharp corners of the panels can damage tile and floor surfaces, so it is best to handle the glass panels carefully and protect the edges.

3400/3500 PARTS LIST

A. 1 Tub Track with Vinyl
B. 2 Wall Jambs
C. 6 Plastic Wall Anchors
D. 6 #8 x 1 1/2" Truss Head Screws
E. 4 Nylon Spacers
F. 1 Header
G. 2 Glass Panels
H. 4 Hanger Brackets (Pre-assembled)
K. 2 Acrylic Towel Bar Brackets
L. 2 Towel Bar Bases
M. 2 2 #10-24 x 1/2" Flat Head Screws
N. 1 Towel Bar
P. 4 Vinyl Shims
R. 2 Pull Handles
S. 1 Nylon Bottom Guide
T. 2 #6 x 3/8" Pan Head Screws
U. 4 Stainless Steel Bumper Inserts
V. 4 Vinyl Jamb Bumpers
W. 1 Basco Decal

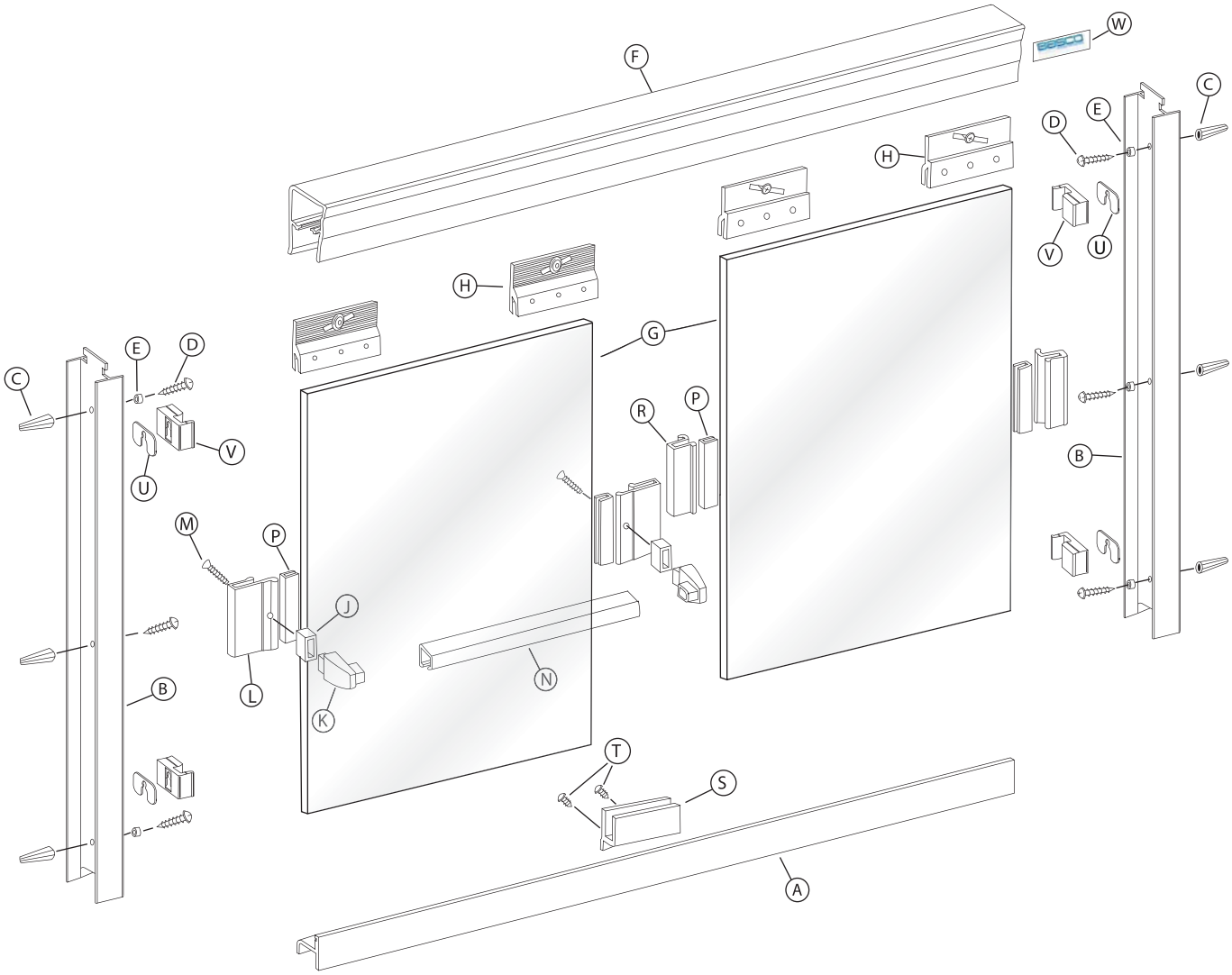

1 Measure the wall-to-wall opening at the center of the tub rim. Cut the tub track [**A**] 1/16" short of this dimension. An inexpensive miter box available at your local hardware store will help you get clean square cuts.

Position the tub track in the center of the tub rim with the tall leg to the exterior. It may be necessary to file a radius on the ends of the tub track and wall jambs to match the corners of the tub.

Press both wall jambs [**B**] into position over the tub track. Masking tape can be used to hold the parts in place temporarily.

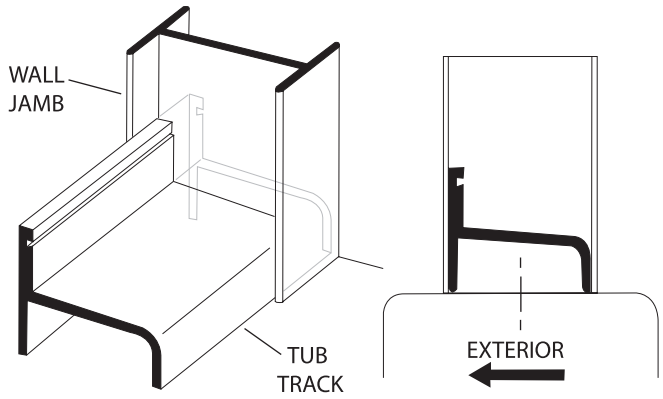

2 Use a level to plumb both wall jambs [**B**], then mark the pre-drilled hole locations on the wall. Lightly mark along both sides of the tub track [**A**] with a pencil, then remove all parts.

For tile or marble walls, drill six 3/16″ diameter holes and insert the plastic wall anchors [**C**]. A center punch helps locate the holes accurately.

Attachments to fiberglass or acrylic units can be made in two ways. If reinforcement is built into the wall of the unit, drill six 1/8" diameter holes and install the screws directly into the reinforcement. If the walls are not reinforced, drill 3/16″ holes and install plastic wall anchors or molly bolts (molly bolts not supplied by Basco).

CAUTION: The track should never be screwed to the tub. This will damage the tub and cause leakage.

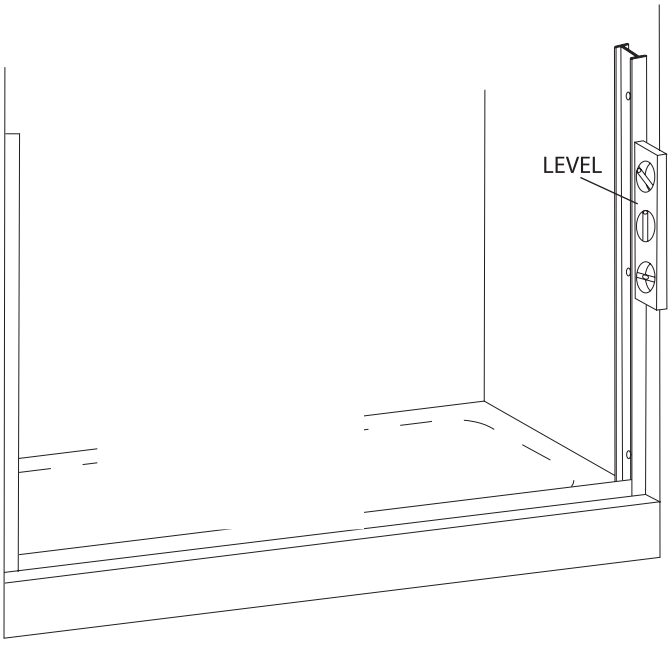

3 Before replacing the tub track [**A**], force a slight downward bow in the extrusion. This will ensure the track fits tight to the tub. Run two beads of caulk inside the penciled marks on the tub rim. Place the tub track in the exact position marked in Step #**2** and seat it firmly in the caulking.

NOTE: Improper caulking will result in leaks.

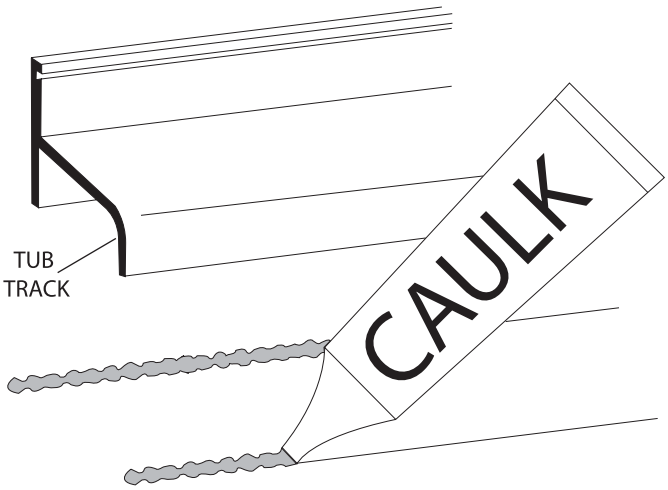

4

Replace one wall jamb [**B**] and attach to wall with a #8 x 1 1/2" truss head screw [**D**] inserted through the center hole. Slip a nylon spacer [**E**] over a #8 x 1 1/2" truss head screw and install in the top hole of the wall jamb. Check jamb for plumb and tighten screws.

NOTE: Do not over-tighten the jamb screws.

Note: The nylon spacers (four) should fit over the top and bottom #8 x 1/2" truss head screws.

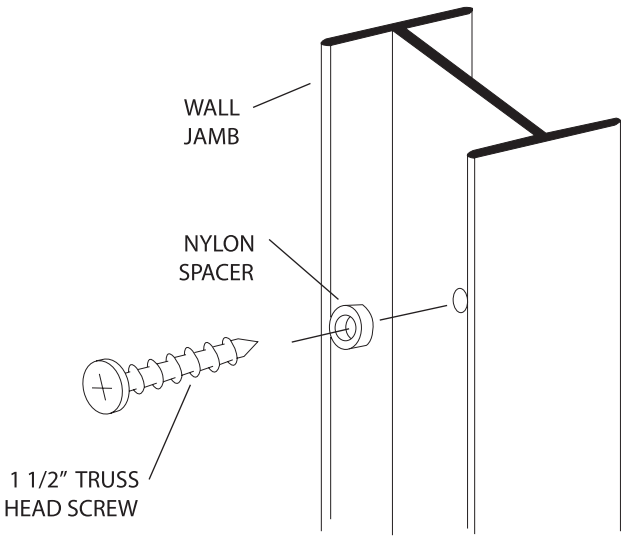

5

This bath enclosure is equipped with safety tee-lock wall jambs. When installed properly, the header is permanently locked to the wall jambs and cannot be accidentally dislodged.

Measure the wall-to-wall opening at the top of the wall jambs [**B**] and cut the header [**F**] 1/16" short of this dimension. Check the header for fit.

Slide the safety tee-lock of the un-mounted wall jamb into the header. The contoured surface of the header goes to the exterior of the unit.

Holding the header at an angle, engage the end onto the mounted wall jamb. Pivot the header into place, then slide the loose wall jamb to the wall and press into position on the tub track. Attach to the wall per instructions in Step #**4**.

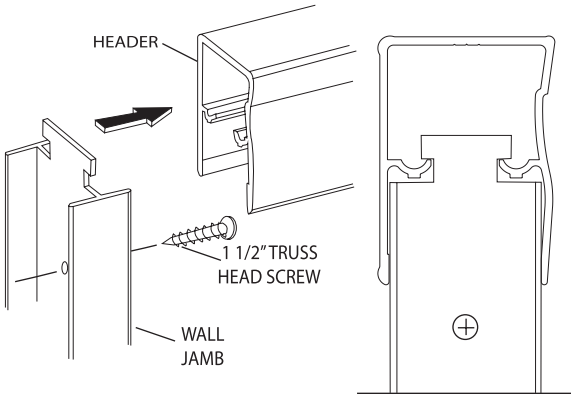

6

Obscure glass panels [**G**] should be installed with the rough surface of the glass to the exterior of the unit. Etched glass panels should be installed with the patterned surface to the outside. Note that the hanger brackets [**H**] are mounted in opposite directions to create an interior and exterior door panel.

If the hanger brackets are not factory-installed, slide the pre-assembled brackets onto the top edges of the interior and exterior glass panels. Tighten the three screws on each bracket evenly to securely grip the glass panel. Check the nylon roller on each bracket for tightness and proper location in the center of the slot.

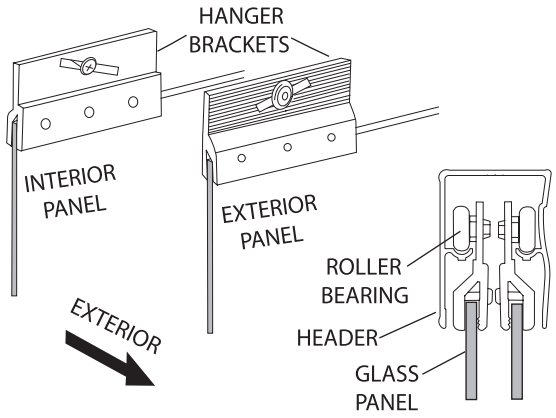

7 Slide the two trim rings [**J**] over the acrylic towel bar brackets [**K**] and attach to the towel bar bases [**L**] with two #10-24 x 1/2" flat head screws [**M**]. Force the towel bar [**N**] onto one of the brackets. At the center of the exterior glass panel, press the base (with towel bar attached) and the vinyl shim [**P**] over the glass. Install the remaining base in a similar manner, locking the towel bar into place between the two brackets.

NOTE: Do not use a metal hammer to install the towel bar Bases.

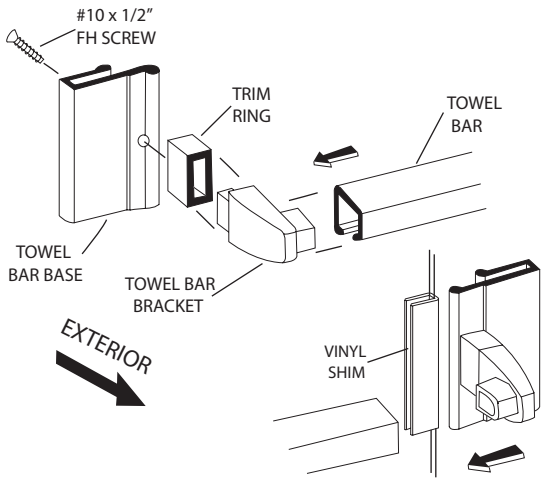

8 Align the two pull handles [**R**] and vinyl shims [**P**] into place on the interior glass panel at the same height as the towel bar bases [**L**] were mounted on the exterior panel.

NOTE: Do not use a metal hammer to install the pull handles.

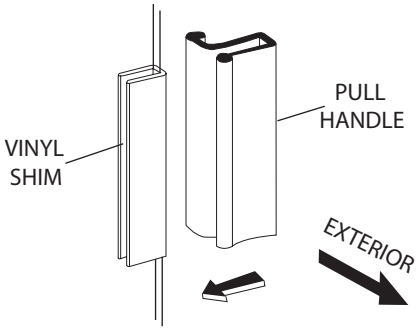

9 Before installing the door panels, the proper orientation should be determined. For maximum water-proofing, the interior panel should always be positioned closest to the shower head, as shown in this illustration.

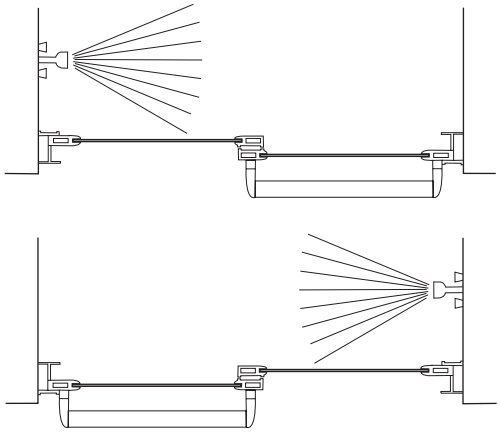

10 Lift the interior glass panel into position with the rollers engaging the groove in the header [**F**]. Repeat for the exterior panel. If panels are not parallel to their respective wall jambs, remove and adjust the rollers up or down in their slots to compensate.

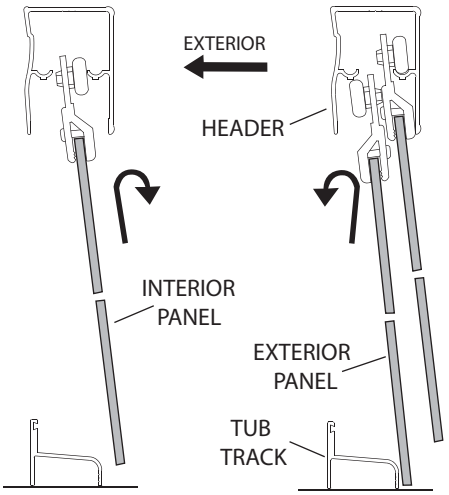

11 Locate the nylon bottom guide [**S**] in the middle of the tub track [**A**] with the glass panels in the position shown. With a 7/64" bit, drill two holes into the V-groove through the mounting holes in the guide. Install the bottom guide with two #6 x 3/8" pan head screws [**T**] thru the drilled holes as shown.

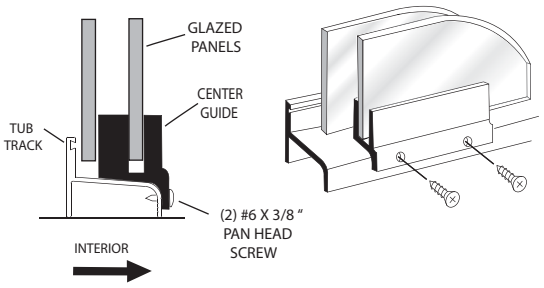

12 Slide the stainless steel bumper inserts [**U**] into the four soft vinyl jamb bumpers [**V**]. Align the slots in the bumpers with the glass panels and snap the bumpers downward over the top and bottom wall jamb screws [**D**] with the spacers [**E**].

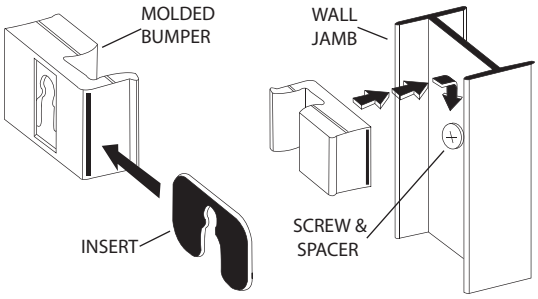

13 Neatly caulk each end of the tub track [**A**] where it meets the wall jambs [**B**] and the interior edge of the wall jambs as shown. Run a bead of caulking along the interior edge of the tub track.

NOTE: The caulking should be allowed to cure for twenty-four hours before using your new bath enclosure.

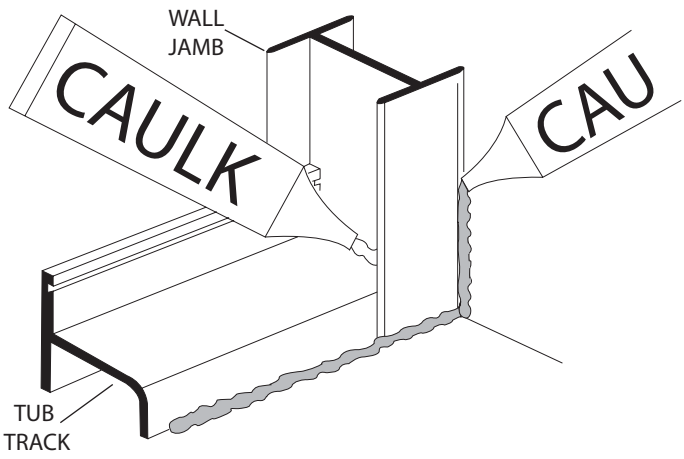
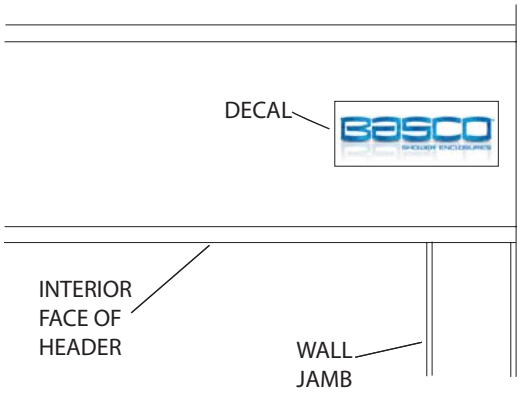
14 Peel the backing from the Basco decal [**W**] and place it at the end of the header [**F**] on the interior face.