BASCO
SHOWER ENCLOSURES

INSTALLATION INSTRUCTIONS

NEED INSTALLATION HELP?
Call 1-800-45-BASCO (452-2726)
Monday - Friday
8:00 A.M. - 4:30 P.M.
Eastern Time

Unit No. 100, 200, 500
Pivot
Single Swing
Shower Enclosure

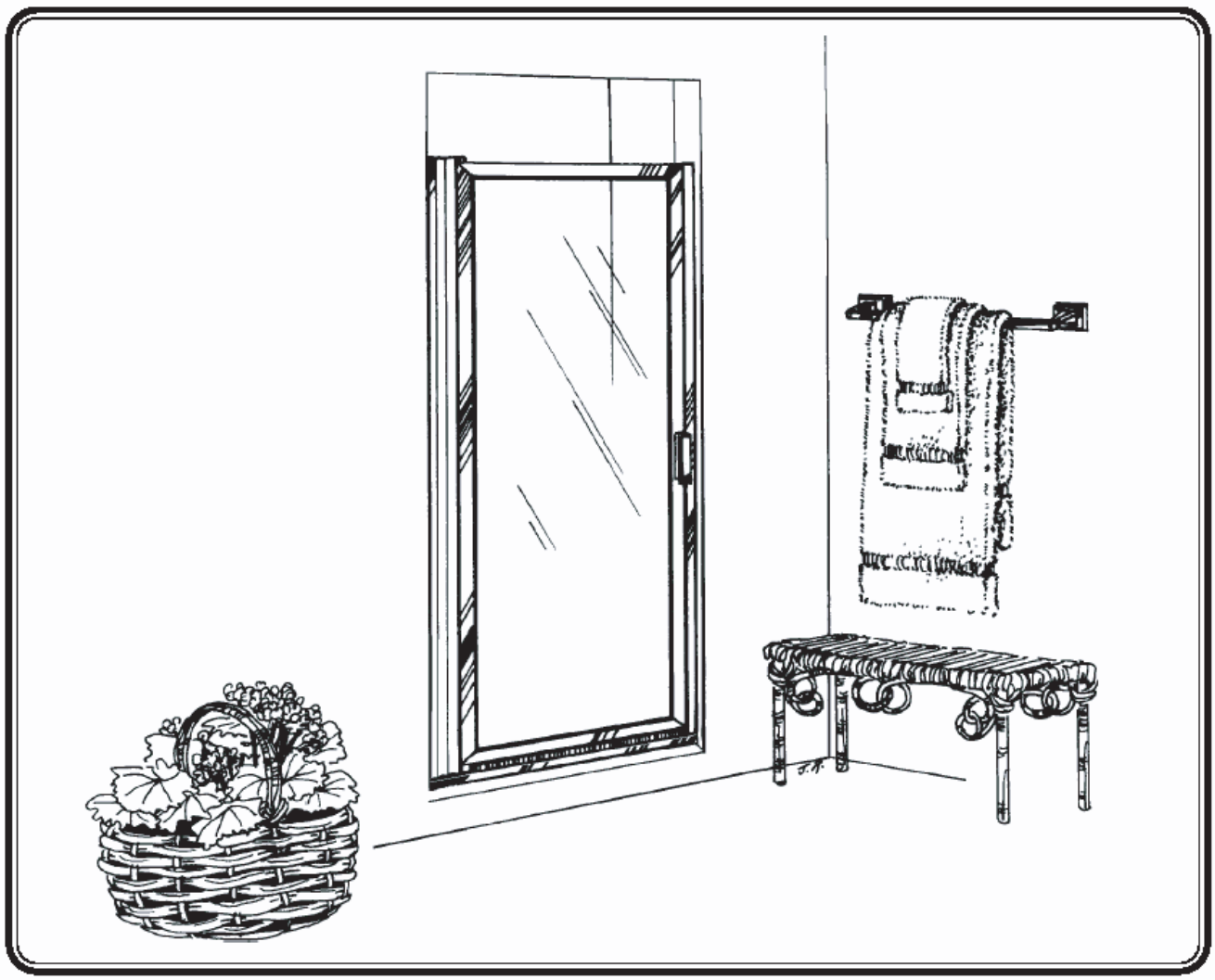

MAINTENANCE: Two primary materials are used to manufacture your new bath enclosure: tempered glass and anodized aluminum. To assure a long lasting finish on the enclosure, wipe it down with a towel after each use. Never use a scouring agent to clean the aluminum.

For occasional, more concentrated cleaning efforts, we find that Lysol Bathroom Cleaner works extremely well. Be sure that any over spray falling on the aluminum frame is rinsed thoroughly and dried. Many over-the-counter cleaners, if applied to the aluminum and left on, will harm the metal finish and cause permanent damage, even though their directions indicate safe use on shower doors.

INSTALLATION NOTES: Unpack your unit carefully and inspect for freight damage. Layout and identify all parts using the instruction sheets as a reference. Before discarding the carton, check to see that no small hardware parts have fallen to the bottom of the box. If any parts are damaged or missing, refer to the descriptions noted in the instructions when contacting your dealer for replacements.

Handle the glass panels carefully and protect the edges.

Please wear safety glasses whenever drilling or cutting. When drilling holes in the ceramic tile or marble, use a center punch and hammer to carefully break the surface glaze so the drill can start without skidding.

To install your Shower Door you will need the following: tape measure, level, hacksaw, drill, 1/8" and 7/32" drill bits, #2 Phillips screwdriver, 3/16" wrench, sharp knife, and caulking (clear silicone recommended). Optional tools include a center punch, files, a miter box for cutting parts to length and masking tape for holding parts in place temporarily. Please wear safety glasses whenever drilling or cutting.

NOTE: Tempered glass cannot be cut.

Although safety tempered glass is very resistant to breakage, the glass can still break if unequal pressure is placed on it during installation. Use caution. In addition, the sharp corners of the panels can damage tile and floor surfaces, so it is best to handle the glass panels carefully and protect the edges.

PARTS LIST

A.	1 Curb	J.	3 #8 x 2” Truss Head Screws	T.	2 #6 x 1 1/4” Round Head
B.	1 Jamb Wiper Vinyl	K.	2 #10 x 7/16” Sq. Hd Set Screws	V.	1 Drip Rail
C.	1 Pivot Jamb	L.	1 Glazed Door Panel	W.	1 Tapered Drip Vinyl
D.	2 Pivot Brackets	M.	2 Nylon Pivot Bushing	X.	2 Drip Plugs
E.	3 #6 x 3/8” Truss Head Screws	N.	1 Strike Jamb (Magnetic)	Y.	1 Roll Drip Tape
F.	2 #8 x 1/8” Allen Set Screws	P.	3 #8 x 1 ½” Flat Head Screws		
G.	1 Allen Wrench (5/64”)	R.	1 Interior Handle		
H.	6 Plastic Wall Anchors	S.	1 Exterior Handle		

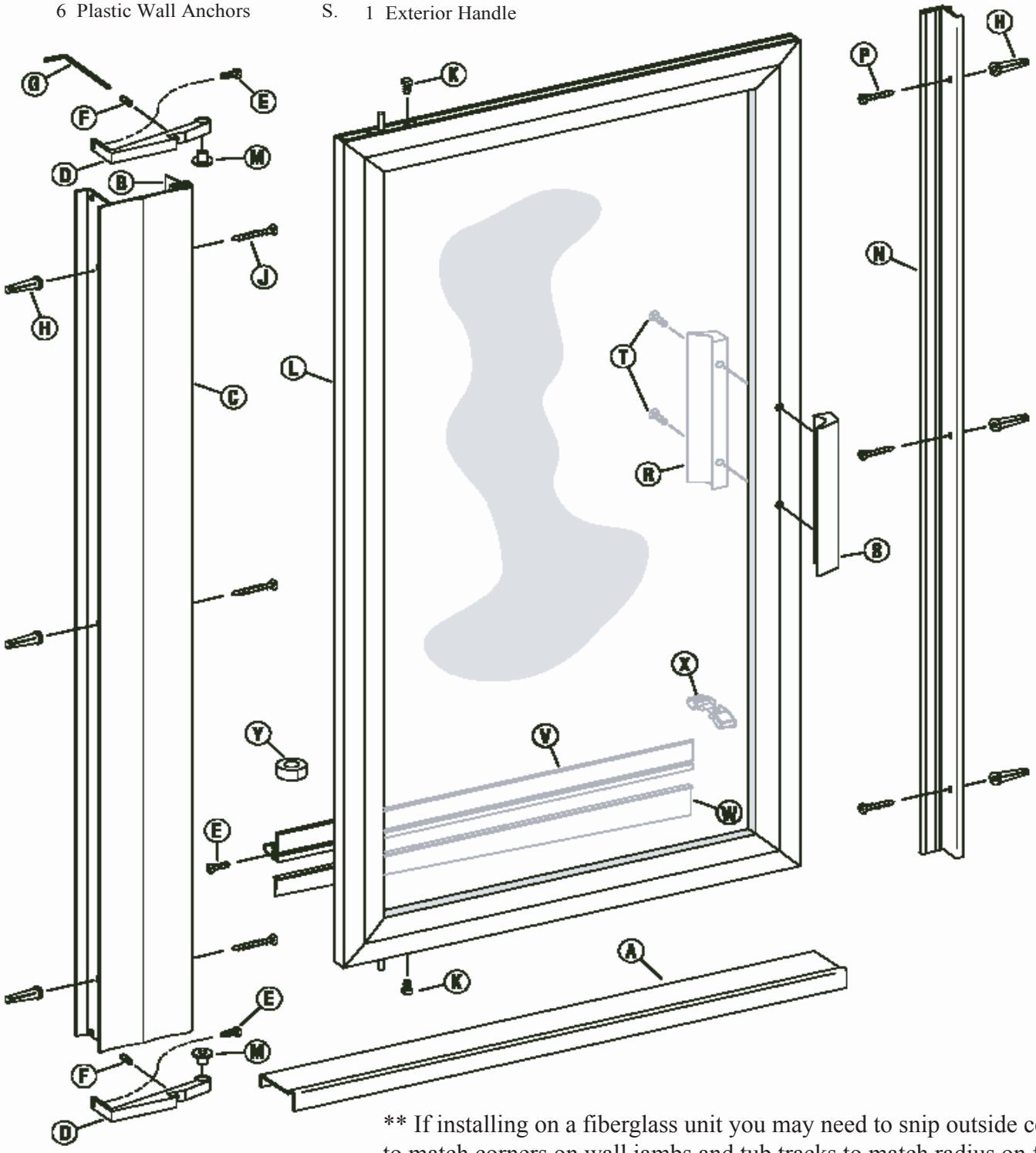

** If installing on a fiberglass unit you may need to snip outside corner to match corners on wall jambs and tub tracks to match radius on fiberglass unit **

1

The Framed Pivot Shower Door is completely reversible and may be installed pivot-right or pivot-left. Using the diagram, determine the correct position for your installation. For maximum waterproofing, the pivot jamb should always be opposite the shower head. These instructions depict a pivot left installation.

CAUTION: For safety, the door must *always* open outward.

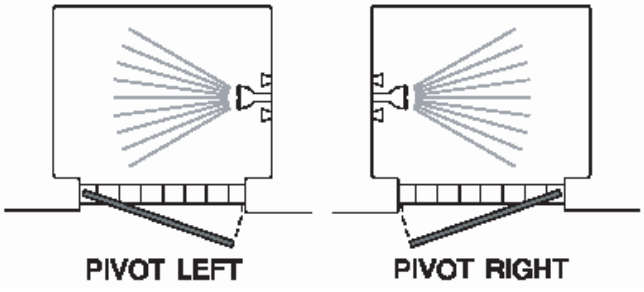

2

Note: This enclosure may be installed without using the sloped curb [**A**] provided. Its use is definitely recommended for positive water control on shower sills with little or no slope.

Measure the wall-to-wall opening at the shower sill and cut the curb to the exact length. File the ends of curb as necessary to fit the corner contours of the enclosure. Place the curb on the shower sill with the **RAISED** portion to the exterior of the enclosure. Make sure the curb is centered on the sill and lightly mark its position on the sill with a pencil. Remove the curb from the sill.

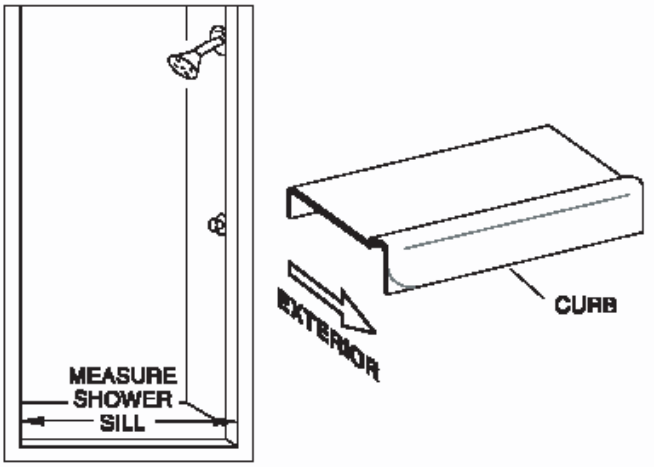

3

Run two beads of caulk inside the penciled marks on the shower sill. Place the curb [**A**] in the exact position marked in Step #**2** and seat it firmly in the caulking. Also caulk the ends of the curb to the walls. Hold curb into place with masking tape.

NOTE: Improper caulking will result in leaks.

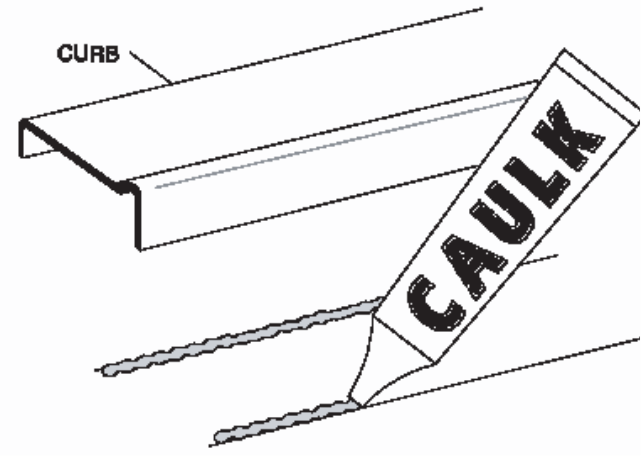

4

Slide the jamb wiper vinyl [**B**] into the pivot jamb [**C**]. A small amount of soapy water will help installation. Cut the jamb wiper vinyl 7/8" shorter than the pivot jamb to allow room for the pivot brackets [**D**]. Fit one of the pivot brackets into the bottom of the pivot jamb. Lock it in place with a #6 x 3/8" truss head screw [**E**] and a #8-32 x 1/8" set screw [**F**] (a 5/64" Allen wrench [**G**] is provided).

NOTE: Set screws (**F**) are pre-installed

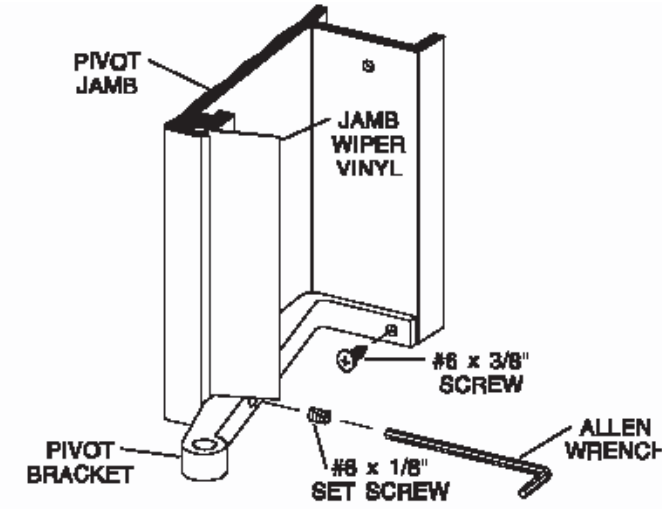

5

Place the pivot jamb [**C**] on the curb [**A**] with the exterior face lined up with the raised edge of the curb. Use a level to plumb the jamb then mark the mounting hole locations. Remove the jamb and drill the mounting holes.

For tile or marble walls, drill three 7/32" diameter holes and insert the plastic wall anchors [H]. A center hole punch helps locate the holes accurately. Attachments to fiberglass or acrylic units can be made in two ways. If reinforcement is built into the wall of the unit, drill three 1/8" diameter holes to install mounting screws directly into the reinforcement. If walls are not reinforced, drill 7/32" holes and install plastic wall anchors or Molly bolts (Molly bolts are not supplied)

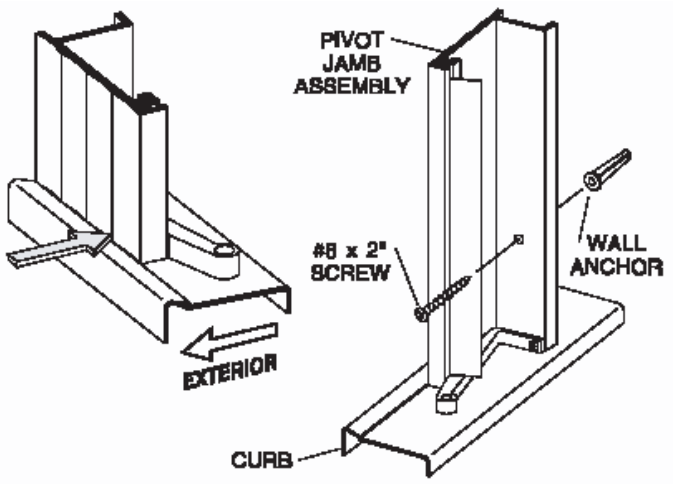

Replace the pivot jamb and attach to the wall with three #8 x 2" truss head screws [**J**].

6

Thread the two #10-24 x 7/16" square head set screws [**K**] into the tapped holes in pivot blocks in the top and bottom rails of the glazed door panel [**L**].

Measure the distance from the wall to wall directly above the curb (Dim. "A"). Deduct 3 13/16" from this amount and position the pivot pins this exact distance (Dim. "B") from the edge of the door. Tighten the set screws just enough to prevent the pivot blocks from moving (finger tight plus a quarter turn). A 3/16" wrench (not supplied) will fit the set screw heads.

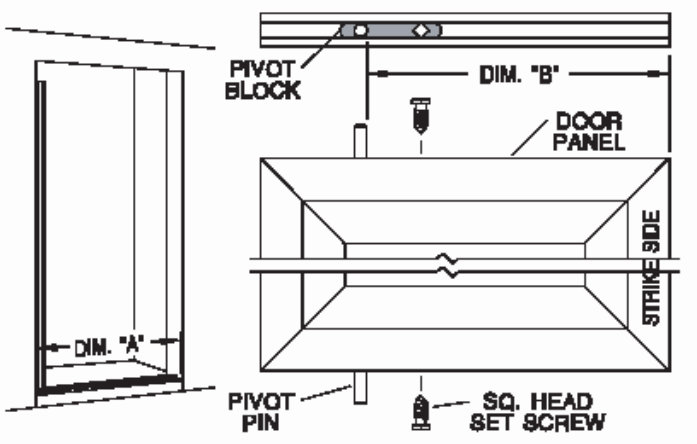

7

Insert a nylon pivot bushing [**M**] into the bottom pivot bracket [**D**]. Slip the second pivot bushing over the top pivot pin on the door panel. Position the door by inserting the bottom pivot pin into the bottom pivot bracket. Hold the door vertical and slide the top pivot bracket into the pivot bushing. Secure the top pivot bracket with a #6 x 3/8" truss head screw [**E**] and a #8-32 x 1/8" Allen set screw [**F**].

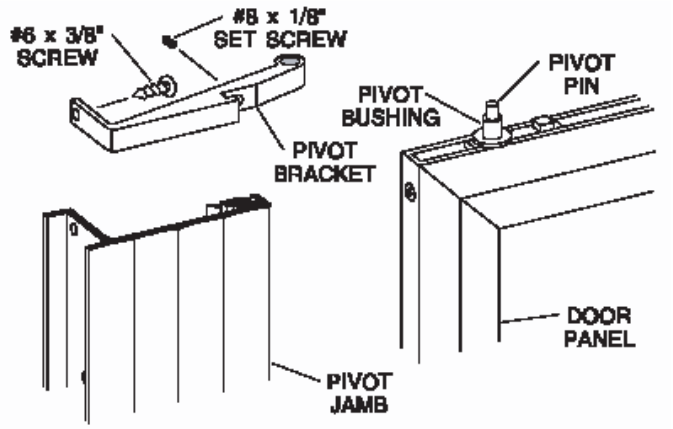

8

Your Pivot Door is equipped with a magnetic catch. Attach the strike jamb [**N**] to the door. Close the door so the strike jamb is 7/8" from the front of the curb [**A**] and mark the jamb location on the wall. If the curb is not used, close the door parallel to the shower sill and mark the jamb location. Remove the strike jamb from the door, hold it in the marked location and mark the hole locations for the mounting screws. Drill the mounting holes per the instructions in Step #**5**. Replace the strike jamb and attach it to the wall with three #8 x 1 1/2" flat head screws [**P**].

Close the door and check the clearance with the strike jamb. If necessary, loosen the set screws [**K**] on the top & bottom slide bars and adjust the door panel to align the magnets. When the door panel is properly aligned, tighten the set screws securely.

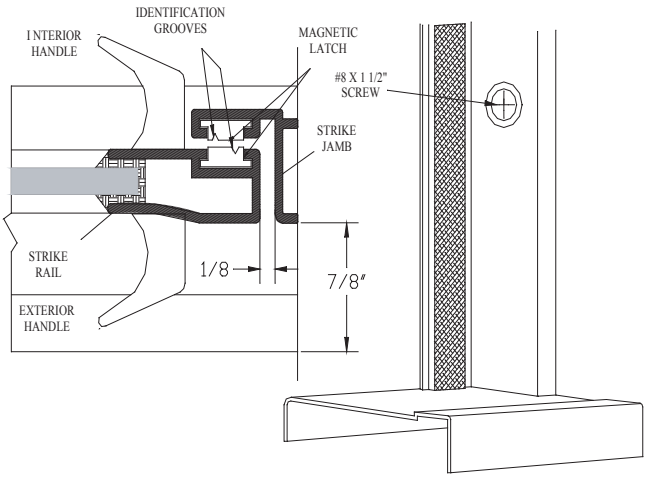

9

Attach the interior door handle [**R**] and the exterior door handle [**S**] to the door with two #6-32 x 1 1/4" round head screws [**T**].

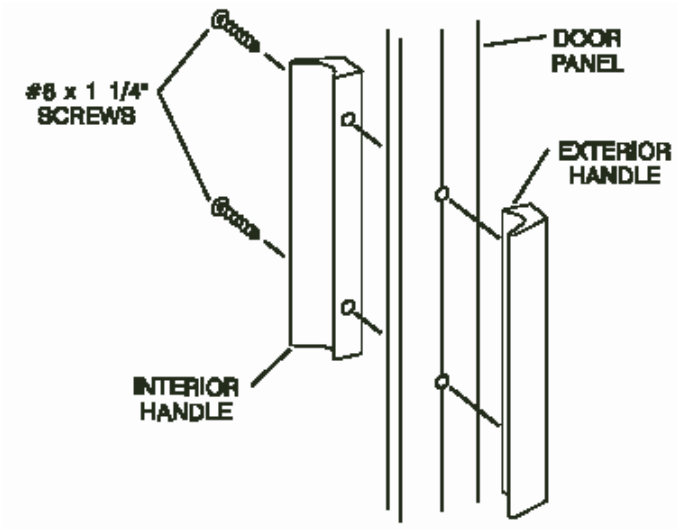

10

Clean the bottom door rail and the drip rail thoroughly with rubbing alcohol to ensure proper adhesion. Unroll the double stick tape [**Y**] and carefully apply it to the back of the drip rail (do not peel the tape backing yet).

Insert the tapered drip vinyl [**W**] into the drip rail. Position the drip rail flush with the bottom and pivot side of the door panel [**L**], then raise the strike side until the bottom edge of the drip vinyl is parallel to the curb [**A**]. Mark the location of each end of the drip rail.

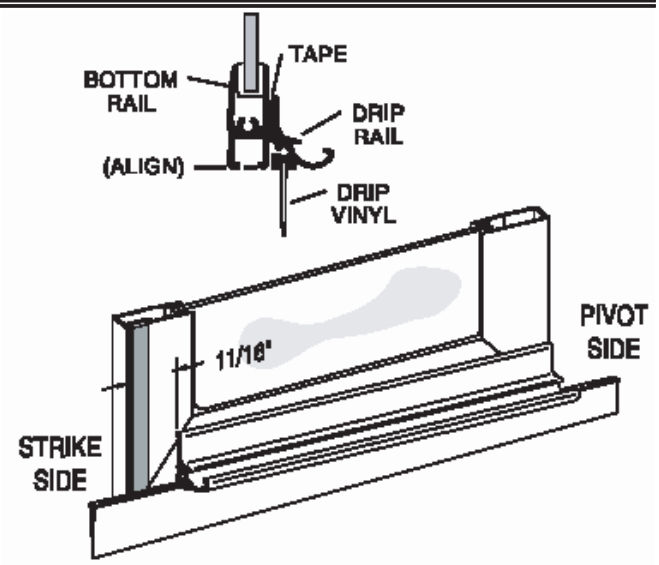

11

Adjust the drip vinyl [W] by sliding it left or right until it just touches the curb. Trim the vinyl (flush with the pivot end and notch ¼" longer than the drip rail as shown on the strike end). Secure it with one #6 x 3/8" truss head screw [E] in the pivot end of the drip rail.

The drip plug [X] is supplied with a left and right hand plug together. Break the right and left drip plug apart and insert the appropriate plug into the high (strike) side of the drip rail. Discard the unused drip plug. Peel off the tape backing and carefully press the drip rail to the door in the marked position.

NOTE: Cleaners with alcohol content can dissolve the adhesive that attaches the drip rail. To prevent this possibility, place a small bead of clear sealant at the top of the drip rail where it is attached to the bottom rail.

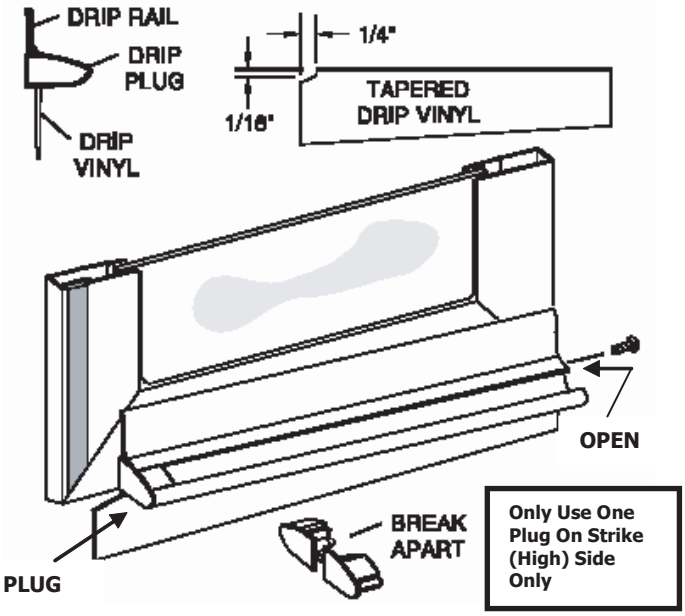

12

Neatly caulk the inside perimeter of the shower curb and wall jambs.
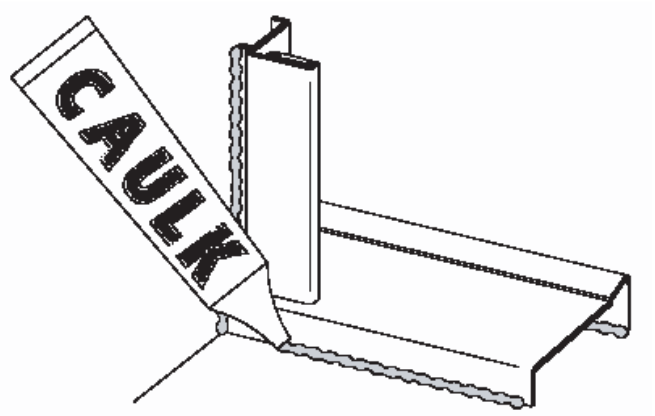
NOTE: The caulking should be allowed to cure for twenty-four hours before using your new shower enclosure.