INSTALLATION INSTRUCTIONS

RODA BY BASCO

Need Installation Help?
Call
1-800-45-BASCO
-452-2726
Monday - Friday
8:00 A.M. - 4:30 P.M.
Eastern Time

Cantour 935

Before You Start

Check Your Box

Unpack your unit carefully and inspect for freight damage. Lay out and identify all parts using the instruction sheets as a reference. Before discarding the carton, check to see that no small hardware parts have fallen to the bottom of the box. If any parts are damaged or missing, refer to the descriptions noted in the instructions when contacting your dealer for replacements.

Make Sure You Have Ready

- ◊ 3/16" & 1/4" Drill Bits
- ◊ Drill
- ◊ Pencil
- ◊ Low Tack Masking Tape
- ◊ 4' & 6' Levels
- ◊ #2 Phillips Screwdriver
- ◊ Caulk (Clear Silicone Recommended)
- ◊ Caulk Gun
- ◊ Suction Cups (Recommended)
- ◊ Center Punch (if drilling into tile)

Warning

Tempered glass cannot be cut.

Although safety tempered glass is very resistant to breakage, the glass can still break if unequal pressure is placed on it during installation. Use caution. In addition, the sharp corners of the panels can damage tile and floor surfaces, so it is best to handle the glass panels carefully and protect the edges.

Maintenance Notes

To assure a long lasting finish on the enclosure, wipe it down with a towel after each use. Never use a scouring agent to clean the aluminum.

For occasional, more concentrated cleaning efforts, we find that *Lysol Bathroom Cleaner* works extremely well. Many over-the-counter cleaners will harm the metal finish and cause permanent damage, even though their directions indicate safe use on shower doors. If your unit has AquaGlide coating applied to glass, use only clean water for daily cleaning. For more concentrated cleaning, use Basco's AquaGlide Maintain Spray on the glass and Lysol on the metal.

Cantour Hinge/Handle

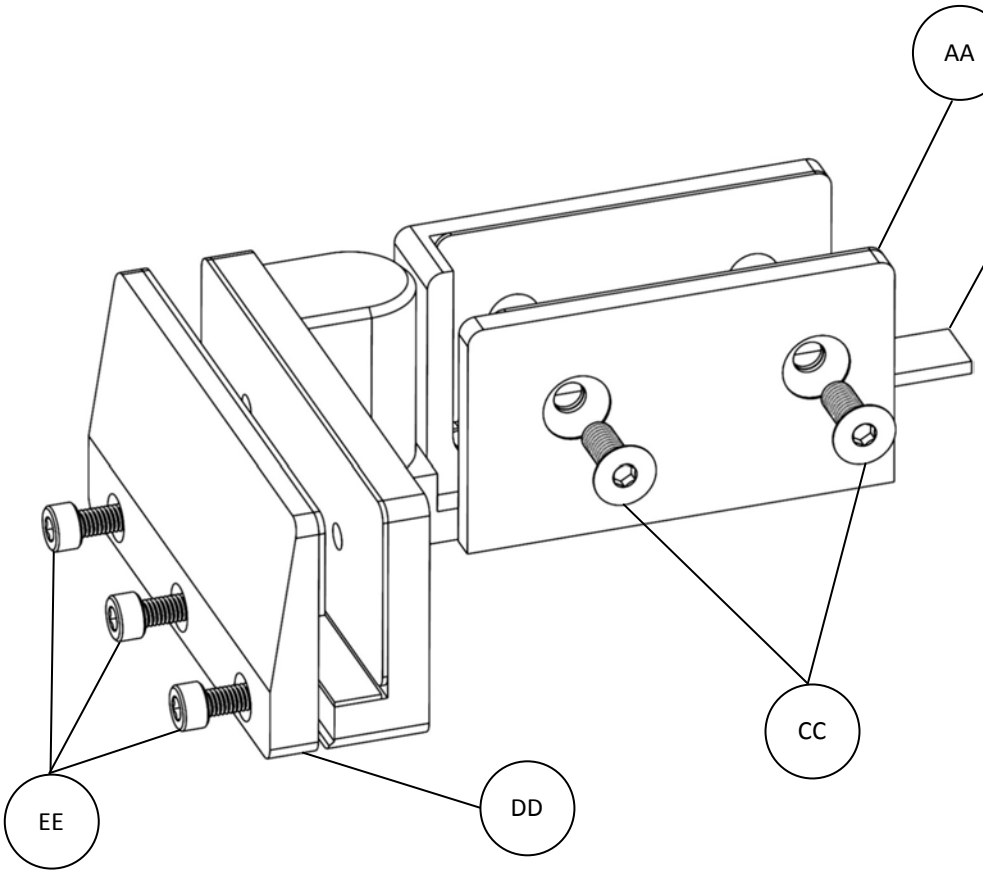

AA	Panel Clamp Plate
BB	Clear Vinyl
CC	Panel Clamp Screws
DD	Door Clamp Plate
EE	Door Clamp Screws
FF	Handle Body
GG	Clear Washer
HH	Handle Stud

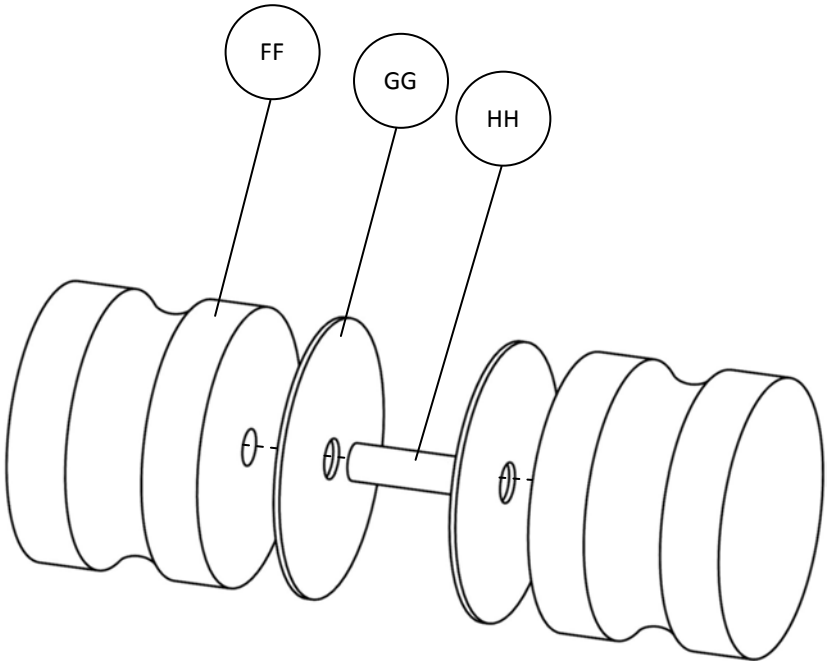

Parts Identification

Parts Identification

ITEM ID	NAME	TECH NAME	QTY
A	1-1/2” DEEP U-CHANNEL	SC928	1
B	1/2” ROLL-IN GLAZING GASKET	SCV922	2
C	SUPPORT BAR *	SC1890	1
D	FIXED PANEL GLASS	N/A	1
E	TOP PIVOT HINGE **	HG11AX-180BS	1
F	DOOR GLASS	N/A	1
G	STRIKE-VINYL	SCV906	1
H	KNOB	KB8D-50BS	1
I	3/8” VINYL SWEEP	SCV937	1
J	BOTTOM PIVOT HINGE **	HG11AV-180BS	1
K	WALL PLUG	SC4106	16
L	STRIKE JAMB SCREW #8x1-1/2”	SCR09	16
M	1-1/2” DEEP U-CHANNEL	SC928	1
N	SETTING BLOCKS (1/2”)	SCV292	2
O	1/2” ROLL-IN GLAZING GASKET	SCV922	2

*Not all units will have Support Bar

** Top and bottom indicated for left hinged doors. Hinge locations are reversed for right hinged doors

THE FOLLOWING ARE NOT INCLUDED IN UNIT DIAGRAM

They can be found in the Parts Pak

ITEM ID	NAME	TECH NAME	QTY
N/A	SETTING BLOCKS (1/8”)	SCV925	5
N/A	SETTING BLOCKS (1/16”)	SCV924	5
N/A	ALCOHOL PAD	N/A	2

Parts Identification

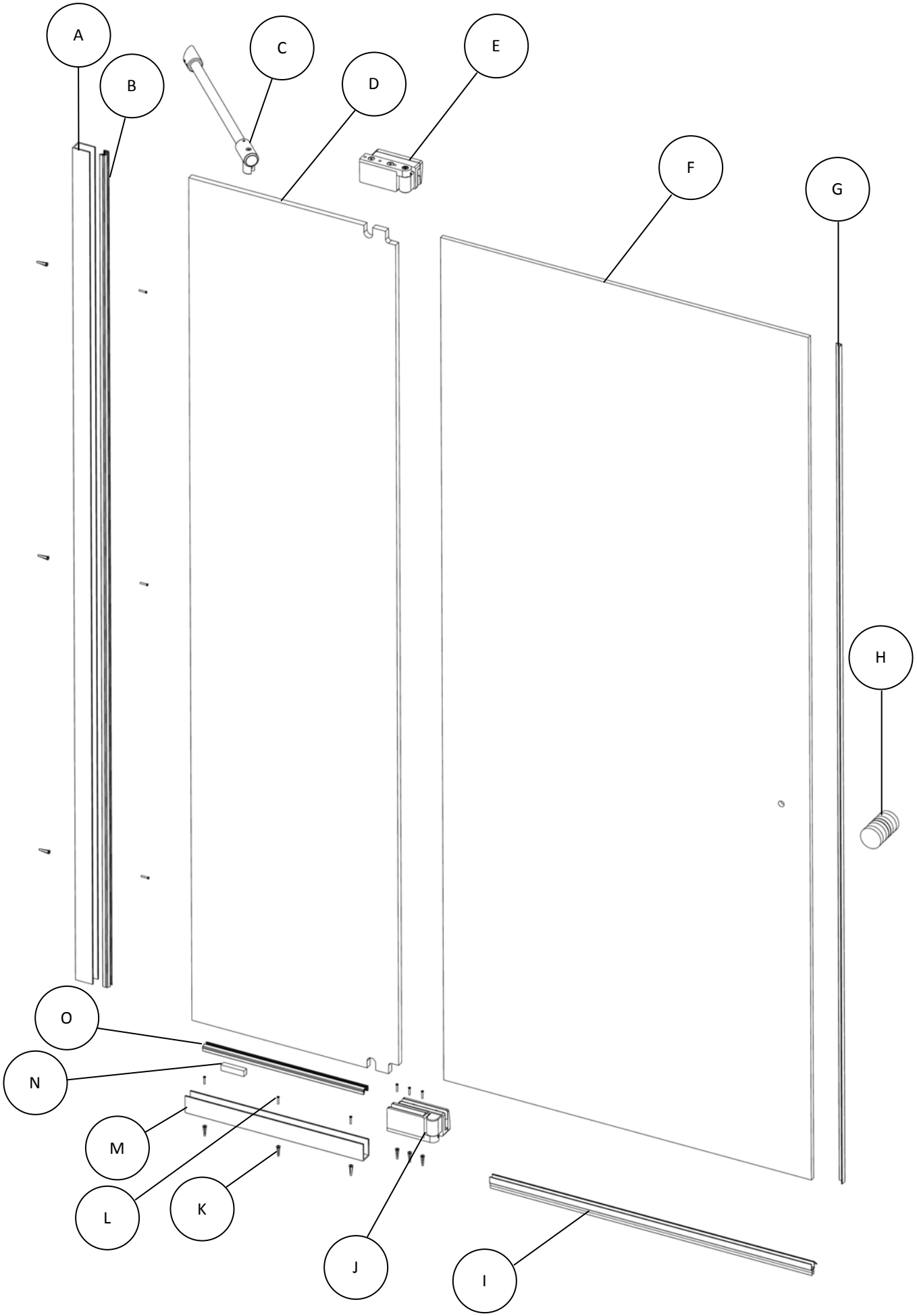

CENTERLINE MEASUREMENT

Our units are ordered based on finished centerline measurements of the location of the unit.

To ensure a proper fit, a centerline should be found and marked as shown below. To start, lightly mark a continuous unit centerline on the threshold.

Next, mark a continuous unit centerline up each wall, starting where the threshold centerline meets the wall. Use a level to ensure the wall centerline is plumb and straight. The wall centerlines you mark should be a minimum of the unit height from the threshold

Centerline is a term used to describe the center or mid-point of the unit. The position of the unit centerline can be located anywhere in the width of the threshold, as long as adequate structure exists beneath the centerline for fastening and the outer edges of the unit will not overhang the threshold. The most common unit centerline position is the middle of the threshold.

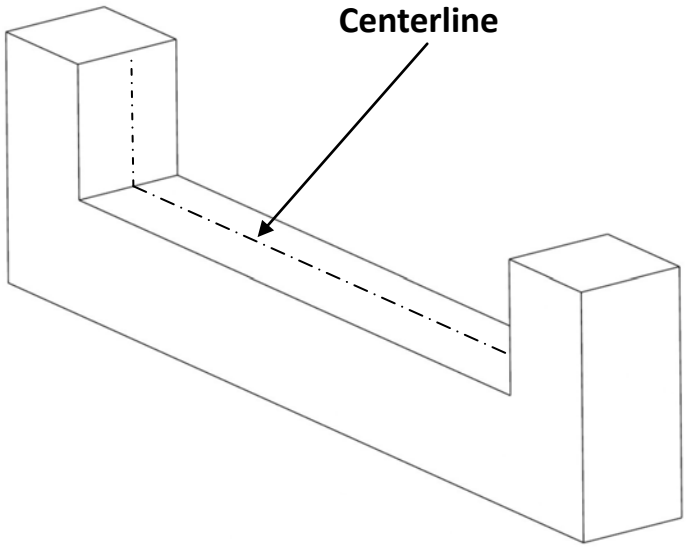

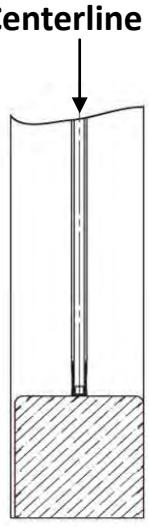

Unit Cross Section

1 HORIZONTAL U-CHANNEL

Find the **U-Channel (M)**. First, the channel needs to be cut to length. Determine the width of your unit's **Fixed Panel (D)** and cut the **U-Channel (M)** 2-1/2" shorter than the width of the glass.

Example: 18" Panel width - 2.5" = 15.5" Channel length

Drill two 3/16" holes approximately 3" from the ends.

Position the **U-Channel (M)** on the marked centerline of your threshold and slide it against the side wall. Mark each hole position on the threshold.

Remove the **U-Channel (M)** and drill 3/16" diameter holes approximately 1-1/2" deep at the marked locations.

Insert a small amount of silicon into each drilled hole, then insert a **Wall Plug (K)** into each hole. Carefully cut the heads off each wall plug with a razor blade and position the **U-Channel (M)**. **You must secure U-Channel before the silicone starts to cure.**

Secure the **U-Channel (M)** with the **Screws (L)**, do not over-tighten.

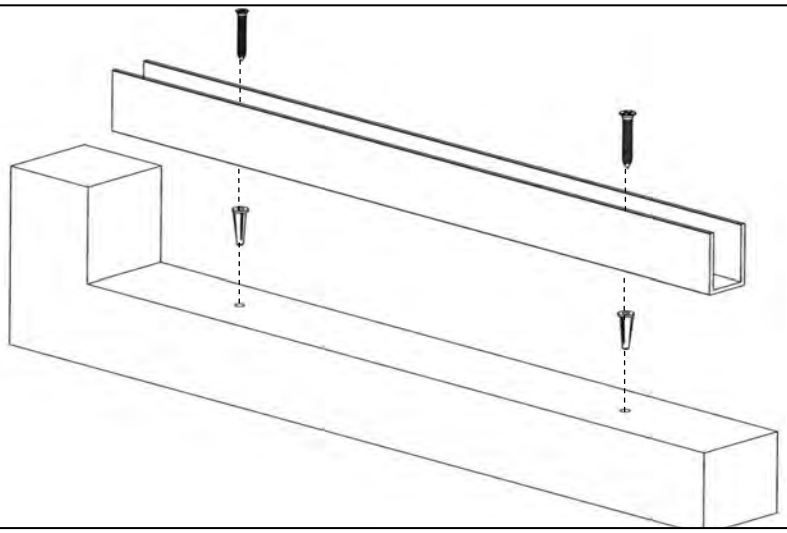

2 VERTICAL U-CHANNEL

Find the **U-Channel (A)**. To cut the channel, determine the height of your unit and cut the **U-Channel (A)** 1-1/2" shorter than the unit height.

Example: 76" unit height - 1.5" = 74.5" channel length

Drill two holes approximately 6" from the top and bottom of the **U-Channel (A)** and a third hole in the middle.

Hold or tape the **U-Channel (A)** against the wall and follow instruction for horizontal **U-Channel (M)** to secure to wall.

Installation

3 BOTTOM HINGE

Find the **Bottom Hinge (J)** and place it on the threshold against the horizontal **U-Channel (M)**. Make sure that the opening for the hinge matches the **U-Channel (M)** as shown below. Mark holes on the threshold then remove the **Bottom Hinge (J)** and drill 3/16" diameter holes approximately 1-1/2" deep (same as **U-Channel (M & A)** holes in steps 1 & 2).

Follow the same steps as securing the **U-Channel (M & A**) to secure the **Bottom Hinge (J)** to the threshold.

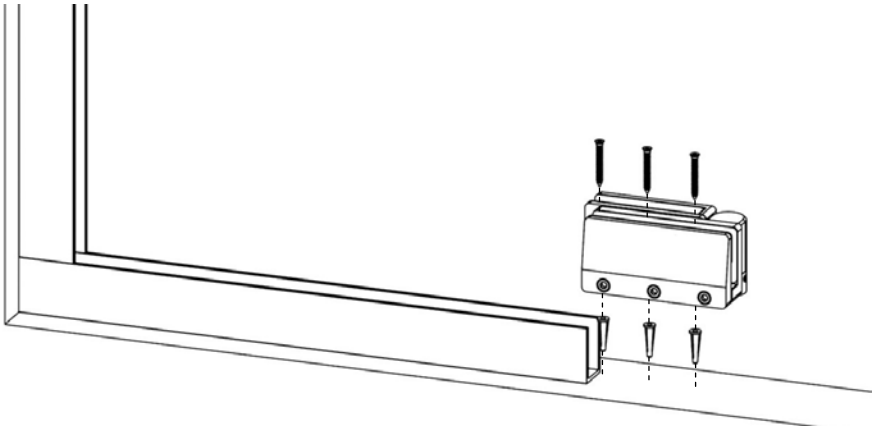

View from outside shower

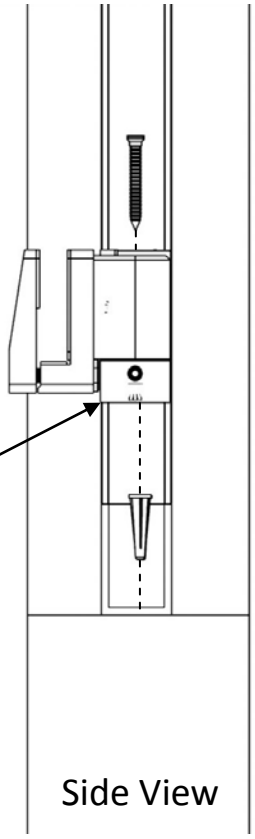

Ensure hinge is in line with U-Channel as shown

Side View

4 GLASS PANEL

Find the **Fixed Panel Glass (D)** and **Setting Block (1/2”) (N)**. Place the **Setting Block (1/2”) (N)** on the **U-Channel (M**) then stack additional 1/16” or 1/8” setting blocks if necessary to make the **Fixed Panel Glass (D)** plumb with the wall and level with the floor. **Do not place setting blocks over screw heads**.

After finding the correct combination of setting blocks, the **Fixed Panel Glass (D)** is ready to be mounted. Take the **Clear Vinyl (BB)** and place it inside the channel of the hinge. Use the alcohol pad (or rubbing alcohol) to clean the section of glass that will go into the **Bottom Hinge (J)** opening. Loosen the **Panel Clamp Screws (CC)**, mount the **Fixed Panel Glass (D)** so it sits inside the **U-Channel (M**) and **Bottom Hinge (J)**, then tighten the **Panel Clamp Screws (CC)**.

The **Fixed Panel Glass (D)** will still be loose and wobble inside the **U-Channel (M**), this is ok for now.

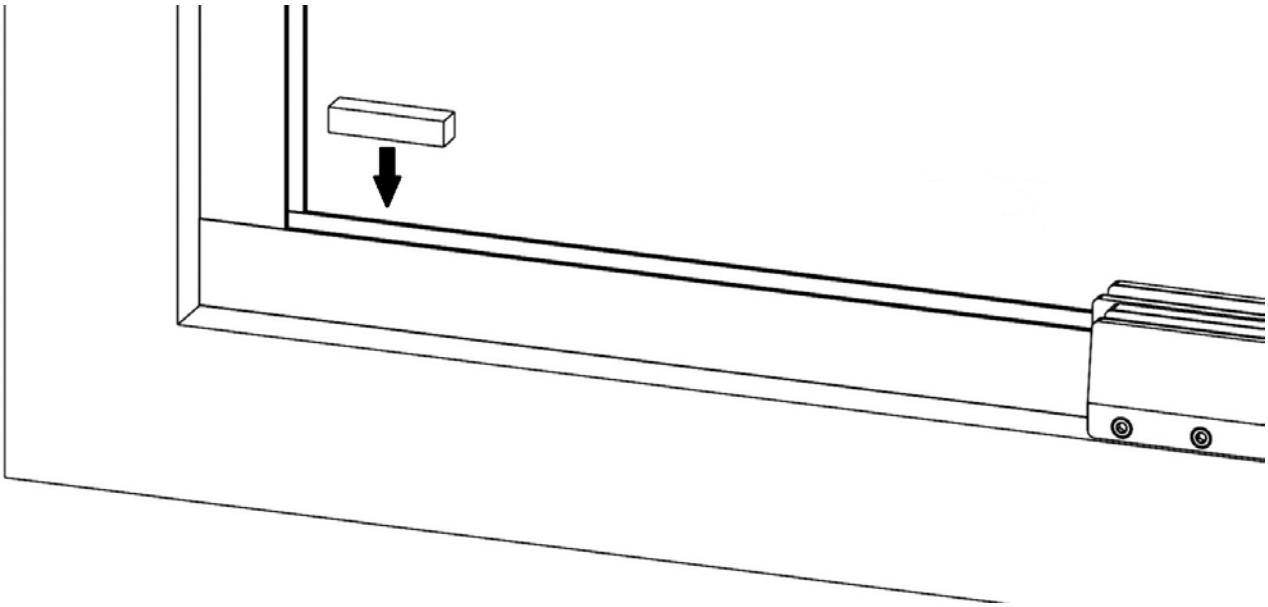

5 GLAZING GASKET

Spray soapy water on the glass near the **U-Channel (M)**. Then insert the **Glazing Gasket (O)** as shown in the figure below. Start at the wall and push the glazing into the gap until you reach the **Bottom Hinge (J)** and cut off any extra. Insert one side completely first, and then the other.

When inserting the wall **Glazing Gasket (B)**, start from the bottom and work your way up, any extra glazing sticking out of the top can be cut off with scissors. Taping the glazing to the top is helpful for holding it upright while inserting. Using a block of wood may be helpful for inserting the glazing.

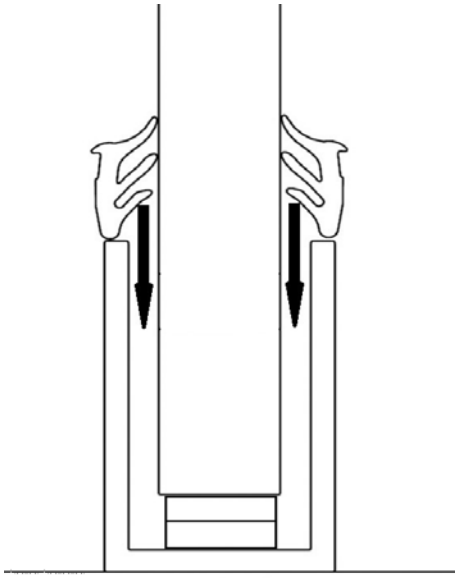

6 TOP HINGE

Find the **Top Hinge (E)** and loosen the **Panel Clamp Screws (CC)**. Use an alcohol swab (or rubbing alcohol) to clean the glass where the hinge will sit. Place the **Clear Vinyl (BB)** in the hinge channel like the bottom hinge.

Place the **Top Hinge (E)** on the notches in the top of the **Fixed Panel Glass (D)** and tighten the **Panel Clamp Screws (CC)**.

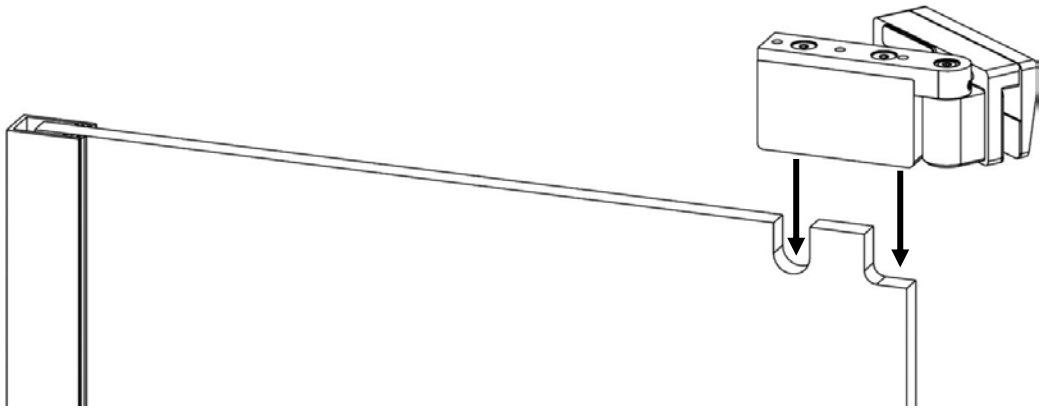

7

DOOR GLASS

To mount the **Door Glass (F)**, loosen the **Door Clamp Screws (EE)** on both the **Top Hinge (E)** and **Bottom Hinge (J)**.

Next, clean the area the **Door Glass (F)** contacts the hinges with rubbing alcohol. Carefully slide the **Door Glass (F)** into the open hinge slots and tighten the **Door Clamp Screws (EE)**.

Slowly close the **Door Glass (F)**, adjusting as required to get a 3/16” gap at the wall. Be sure the **Door Clamp Screws (EE)** are securely tightened when adjusting is complete.

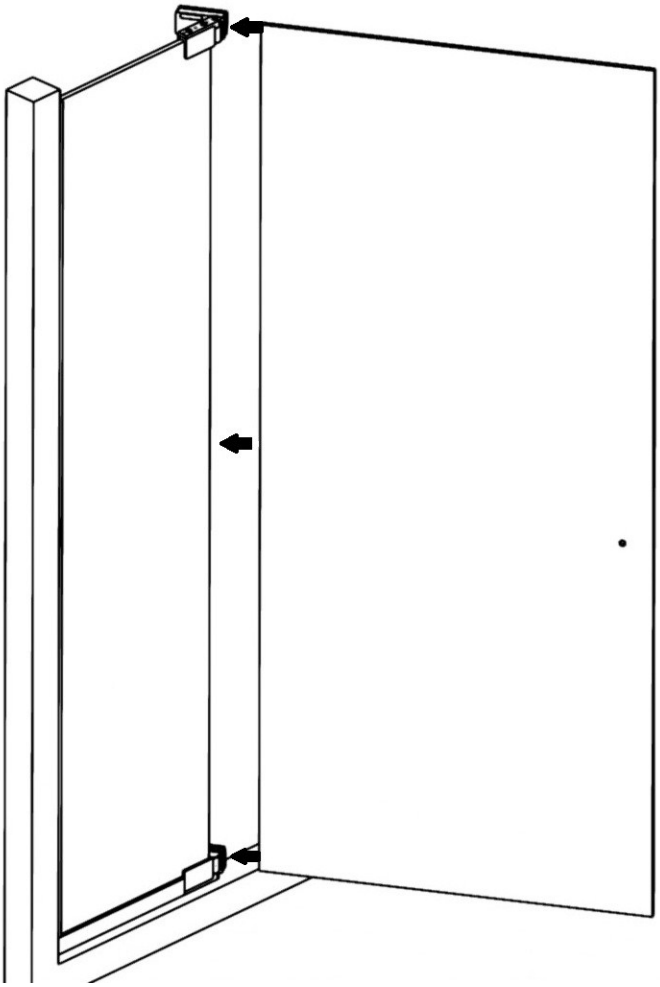

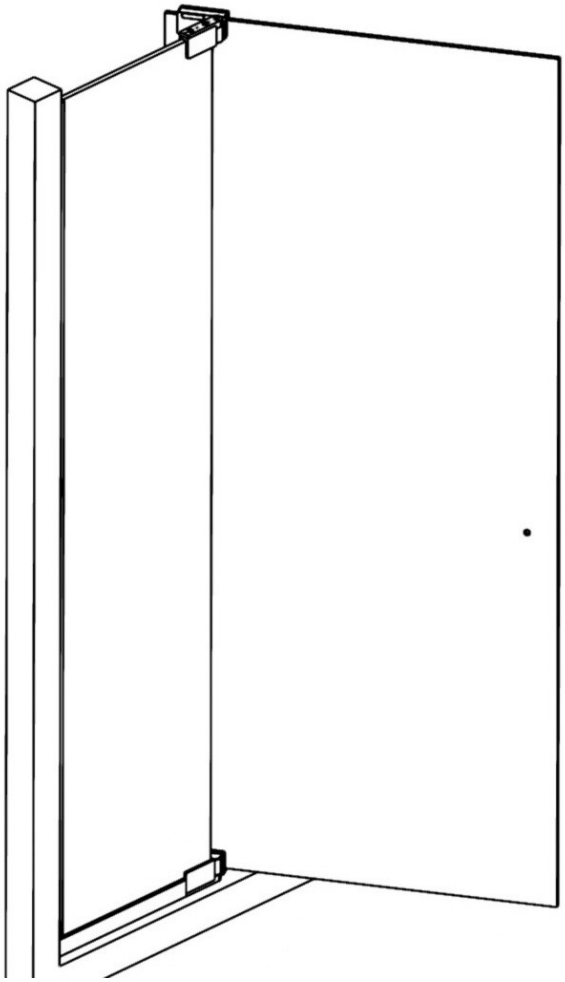

8 SWEEP AND STRIKE-VINYL

The **Sweep (I)** and **Strike-Vinyl (G)** help reduce leakage in your frameless unit and protect the door from damage. Before installation, you may be required to cut the **Sweep (I)** and **Strike-Vinyl (G)** to your unit width and height.

To install, clean the wall with an alcohol swab where the vinyl will sit. Find the **Strike-Vinyl (G)** and peel off the protective strip. Adhere the vinyl to the wall where the door is closed. The vinyl prevents the door from closing too far.

Next, find the **Sweep (I)**. Slide the piece onto the bottom of the **Door Glass (F)** with the wing facing inwards as shown in the figure. Adjust the **Sweep (I)** so that it contacts the threshold. Depending on how closely the sweep contacts your threshold, you may also need to trim the sweep legs for a proper fit.

To prevent the **Sweep (I)** from moving and to reduce water leakage into the sweep, run a bead of silicone on the inside of the door between the sweep and glass.

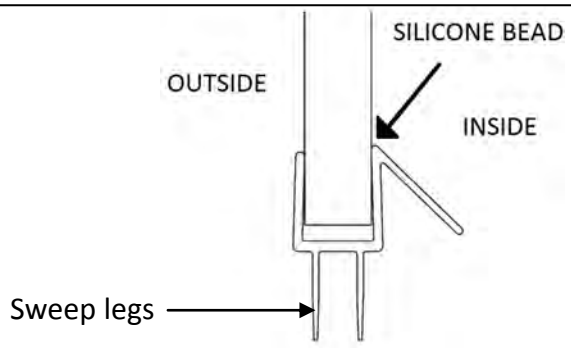

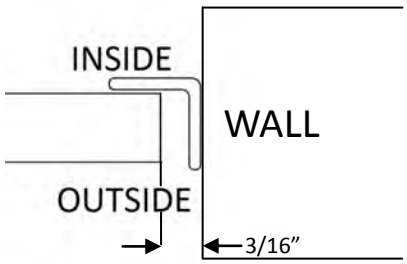

9 HANDLE

Find the **Handle (H)** and unscrew the two sections. Insert the **Handle Body (FF)** and the **Stud (HH)** into the hole in the **Door Glass (F)** and screw the other side of the handle onto the **Stud (HH)**.

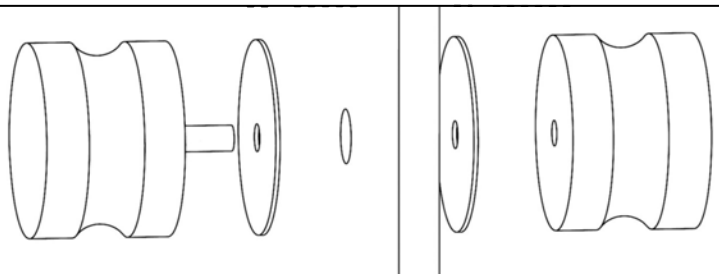

9 SEALING

Run a bead of silicone along the interior edges of the **U-Channels (M & A)** . Run the silicone between the threshold and u-channels as shown.

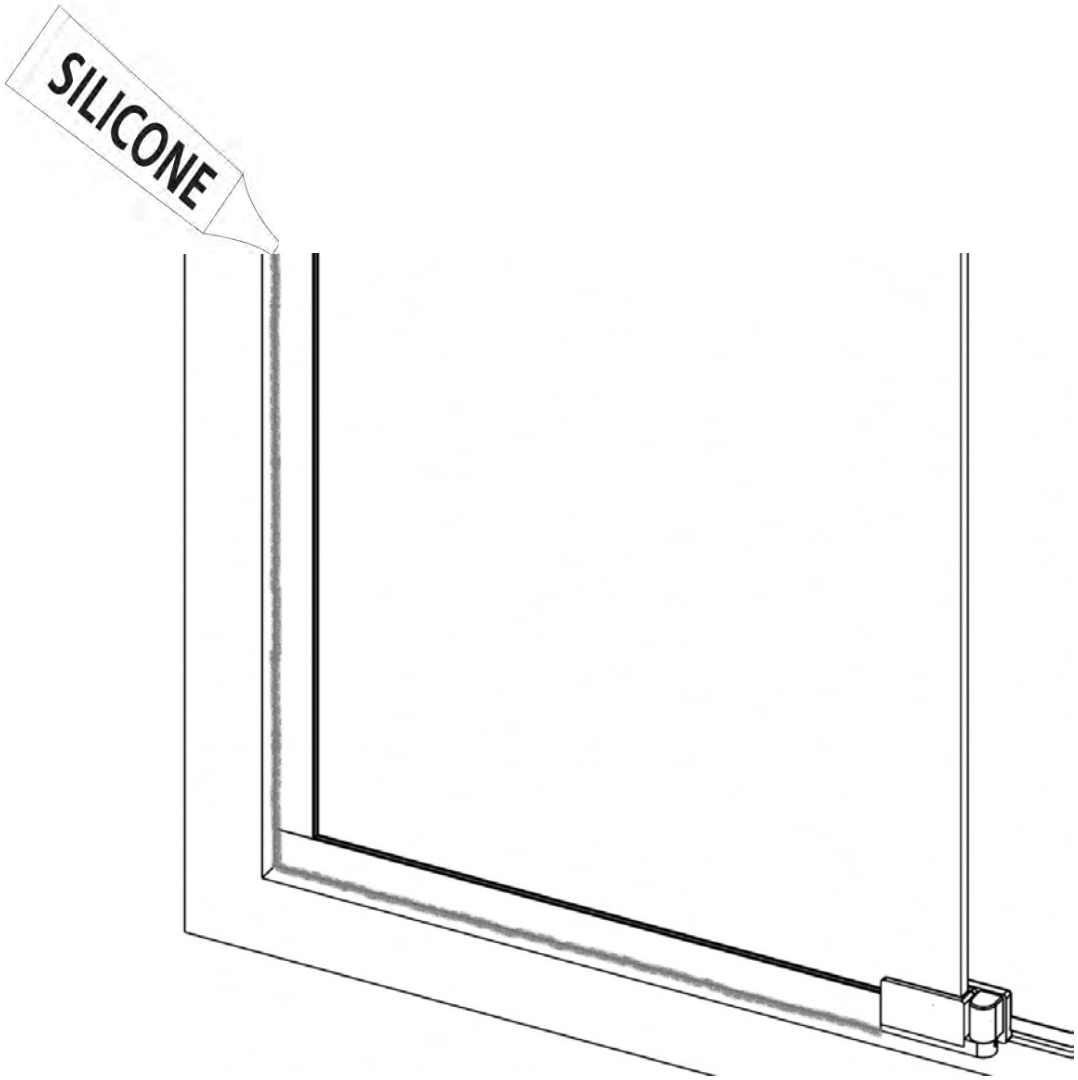

You must wait for the silicone to fully cure before using your shower. Check tube for curing time.

10

SUPPORT BAR

In some applications, Basco requires installing a support bar to make the enclosure safe. The support bar attaches to the panel and screws into the wall. **Note: The support bar as packaged is not cut to length.**

Support bars are included with every enclosure they are required on. To install, find the **Panel Mount (NN)** and loosen the **Panel Clamp Screw (MM)** and place the panel mount on the glass panel approximately 6” away from the edge of glass as shown.

Next, measure from the center of the **Panel Mount (NN)** to the wall. Note the measurement and mark a hole at that distance on the return wall. Drill a 3/16” diameter hole approximately 1-1/2” deep on your mark.

Insert a wall plug and cut off the head with a razor blade. Fasten the **Bushing (QQ)** to the wall using the **Bushing Screw (RR)**. Loosen the **Bushing Clamp Screw (OO)**, place the **Wall Mount (II)** onto the bushing, and make it flush against the wall.

Measure approximately the distance between the **Wall Mount (II)** and **Panel Mount (NN)** where the **Support Bar (JJ)** will sit. Cut the support bar about 1/2” longer than your measurement.

To mount the bar, the **Panel Mount (NN)** needs to be removed and both **Bar Screws (KK & PP)** need to be loosened. Remove the **Panel Mount (NN)** and place one end of the support bar into the **Wall Mount (II)**. Slide the **Panel Mount (NN)** onto the **Support Bar (JJ)** and position the angle adjuster so it fits onto the panel. It is ok if the **Panel Mount (NN)** is not exactly 6” from the edge. Finally, tighten all screws.

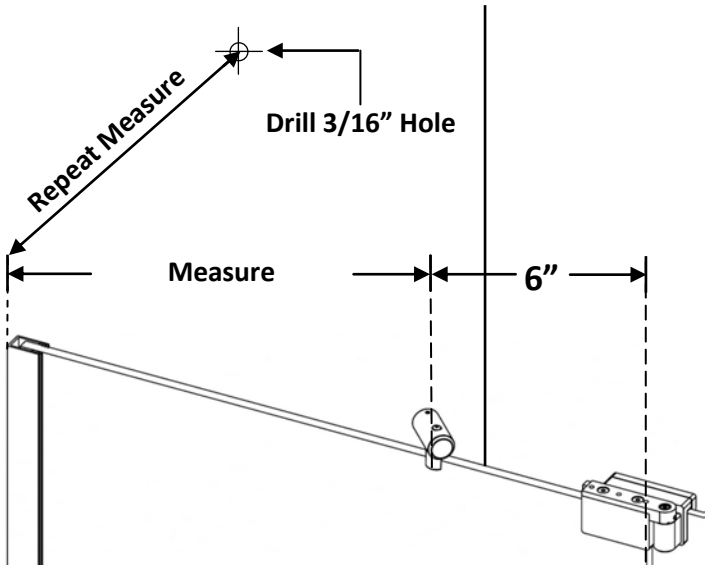

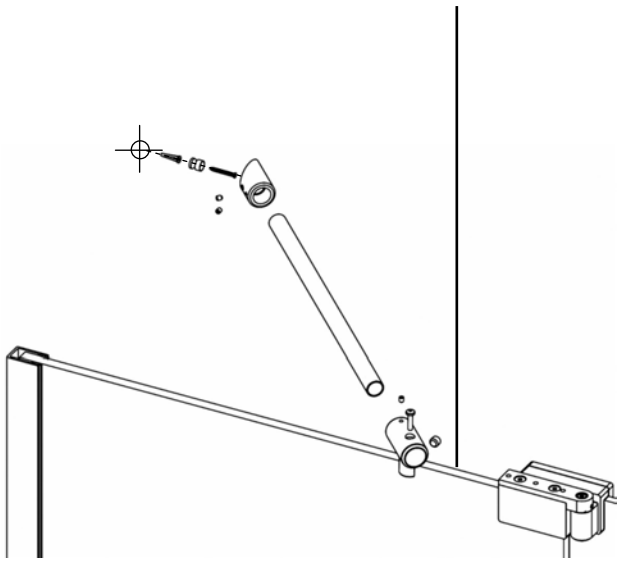

Installation

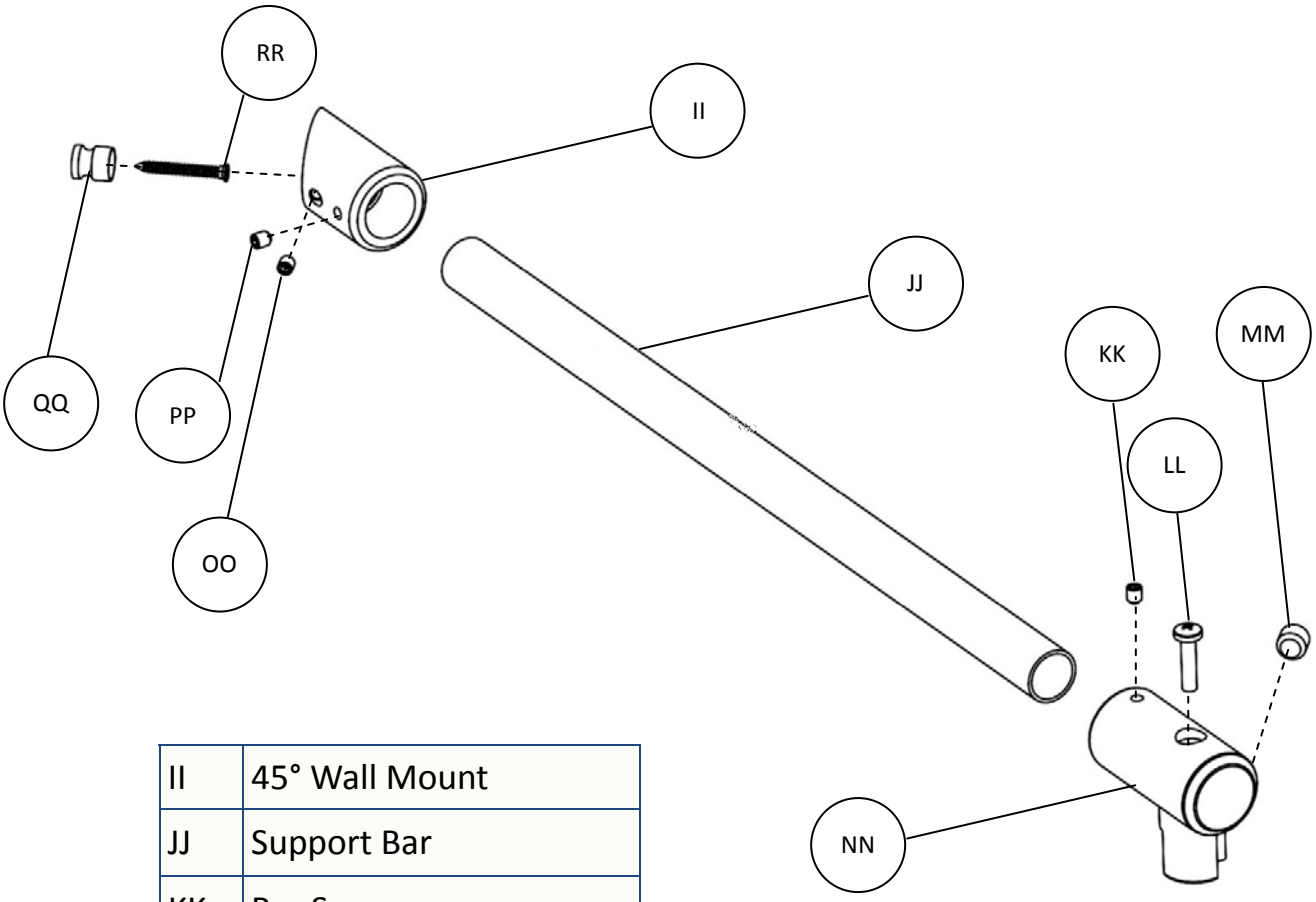

II	45° Wall Mount
JJ	Support Bar
KK	Bar Screw
LL	Angle Adjustment Screw
MM	Panel Clamp Screw
NN	Panel Mount
OO	Bushing Clamp Screw
PP	Bar Screw
QQ	Bushing
RR	Bushing Screw