FRENCHPORTE INSTALLATION GUIDE

The Jennifer Model • The Kendra Model • The Madeleine Model The Christina Model

Before you begin the installation, read ***all*** of the instructions thoroughly.

INSTALLATION AND/OR REPAIR OF GARAGE DOORS SHOULD ONLY BE PERFORMED BY A QUALIFIED GARAGE DOOR INSTALLER. THESE INSTRUCTIONS ARE INTENDED FOR PROFESSIONAL GARAGE DOOR INSTALLERS. DUE TO PRODUCT/ ENGINEERING CHANGES, FASTENERS AND OTHER FIXTURES MAY CHANGE FROM TIME TO TIME. THESE INSTRUCTIONS ARE REPRESENTATIVE OF THE PROPER PROCEDURES FOR A SUCCESSFUL INSTALLATION.

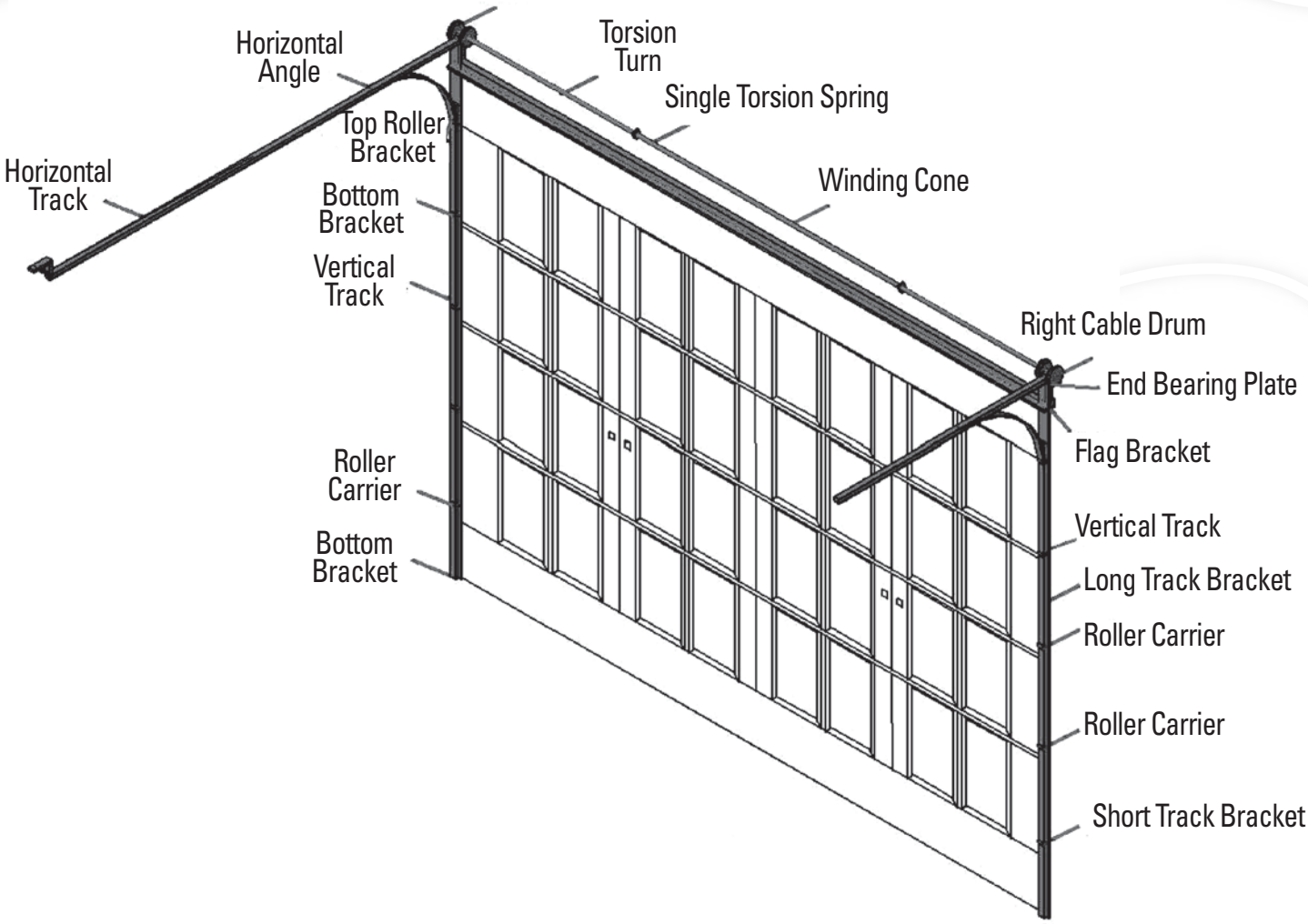

IMPORTANT!

PLEASE READ THE FOLLOWING INFORMATION AND WARNINGS PRIOR TO INSTALLING YOUR NEW DOOR

Garage doors are counterbalanced with spring systems for easy operation. All springs, cables, drums, and bottom fixtures are under very high tension. Adjusting or loosening any fasteners involved with the spring system or bottom fixtures could result in severe injury or death.

Due to worn or rusted parts, removal of your existing door is more dangerous than installing your new door. For these reasons, FrenchPorte® Door recommends having a qualified door technician remove your old door for you.

Keep hands and fingers clear of section joints, track, and all other moving parts of your garage door. Lift handles and pull ropes are included with your door package for safe manual operation of your door.

Do not permit children to play with or beneath your garage door.

Doors equipped with extension springs should never be operated without safety cables.

Use extreme care when winding or adjusting springs. Torsion springs should only be wound with 1/2" diameter cold rolled steel winding bars approximately 18" in length. Use of any other object such as screwdrivers or any other substitute for winding bars may result in severe injury or death.

If the garage door or any of its track system is damaged, operation could be hazardous. Calling a qualified door technician is recommended.

Should replacement parts ever be needed, exact replacements and safety can be best assured by contacting:
FrenchPorte, LLC | CUSTOMER SERVICE 866.545.5744 | *WWW.FRENCHPORTE.COM*

*If you are installing a windload door please go to www.safewaydoor.com for drawings with additionalinstallation instructions.

FRENCHPORTE INSTALLATION GUIDE

The Jennifer Model • The Kendra Model • The Madeleine Model The Christina Model

Thank you for your Frenchporte purchase. In buying a Frenchporte, you have selected one of the highest quality products available in the industry. Not only are our doors beautiful, they are among the strongest garage doors available for purchase today. Congratulations on your purchase of quality second to none.

To begin; it is important to point out that there are a few basic differences that separate the Frenchporte installation from that of a generic steel garage door. These intricacies are small but very important to note.

1. The application of our Pinch Resistent extrusions: These pinch proof joints are used to connect two Frenchporte sections so that the door can operate in the safest most secure manner possible. Our Pinch Resistant extrusions eliminate the possibility of fingers or other body parts being caught between door sections as the door moves up or down.

2. The application of our Frenchporte center hinges: These hinges are an internal reinforcement for the structural design of the Frenchporte sections. The Frenchporte strut containing sections on the back side of the door are reinforced via the application of the center hinge. These hinges not only keep the sections lined up evenly in place. They add to both the quality and life of the door itself. Our products demand the extra support necessary for continuous use and quality control. The application of center hinges is absolutely necessary when installing any Frenchporte product.

3. The lack of predrilled holes in the Frenchporte sections: our Frenchporte sections are constructed of the highest quality materials. In order to keep in line with with our standards and limit negative effects on the door, all Frenchporte sections are void of any predrilling. IT IS THE RESPONSIBILITY OF THE INSTALLER to drill any and all holes in the Frenchporte sections. All hardware installed on the Frenchporte door should be drilled first then lagged. Alignment of all hardware is critical for smooth and correct operation of the Frenchporte door.

With consideration to these three primary differences, the Frenchporte install process is a breeze. Please follow the instructions outlined in this guide closely and concisely as your safety depends on it. Thanks again for your Frenchporte purchase! Feel free to consult our video installation guides online for additional information.

Installation Video Guide:

YouTube Broadcast Yourself™

www.youtube.com
Search: "Frenchporte Installation Guide"
Website: www.Frenchporte.com

Garage Door Installation Guide



Torsion Spring

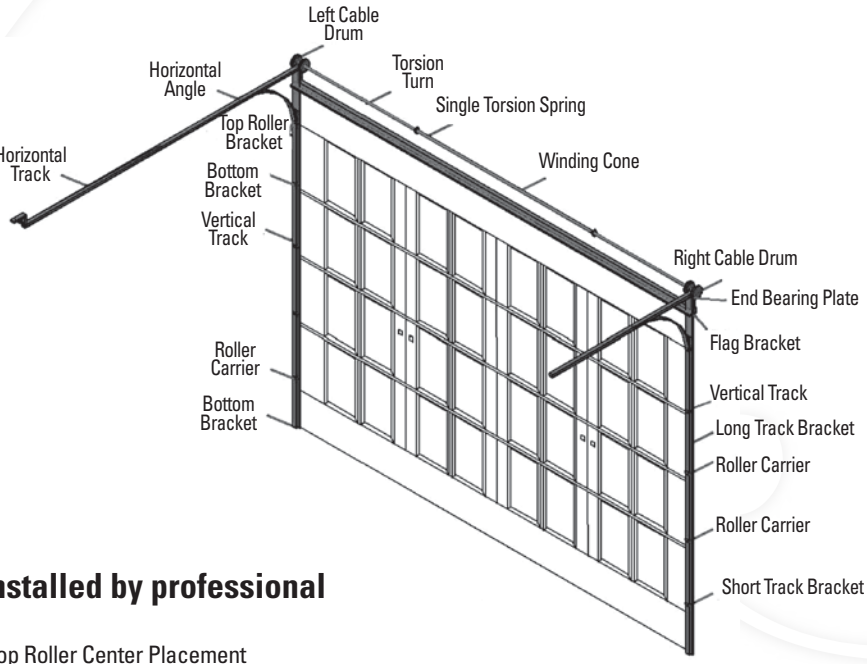

WARNING: TORSION SPRING must be installed by professional

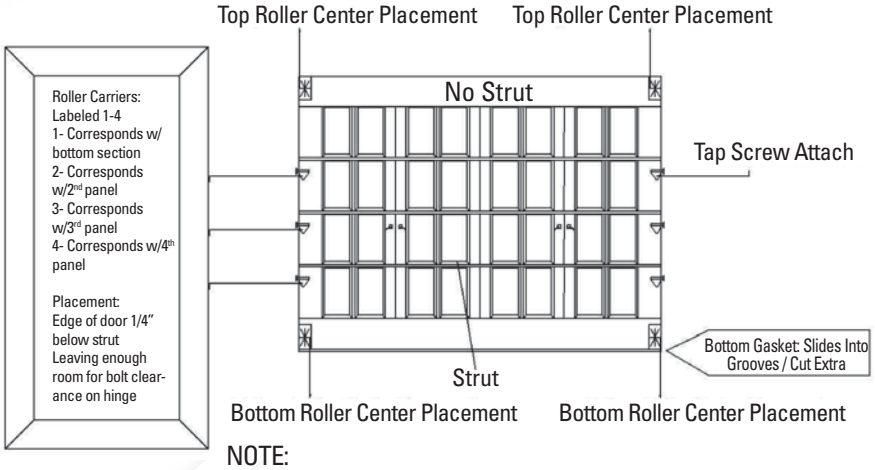

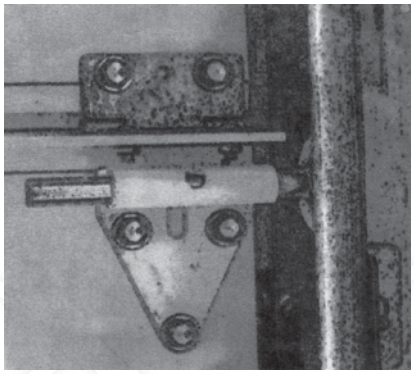

NOTE:

Handles: ALWAYS ask customers preference when mounting handles. CHECK CLEARENCE BEFORE MOUNTING TO DOOR.

Top Roller Carrier: Place at bottom edge of the 1st panel

Alignment of Door: IMPORTANT to always check alignment w/panes, due to style of door aligment is very important. All Holes must be drilled (NO PREDRILLED HOLES). Always attach center hinge than outer. Once hinge are in place attach roller carrier to the lowe panel (this will hold panel in place). Sections will FOLD into place at 75 degree angle.

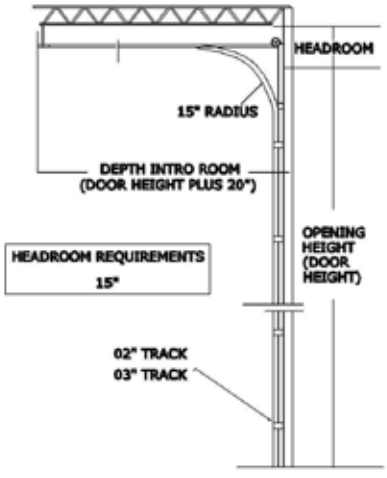

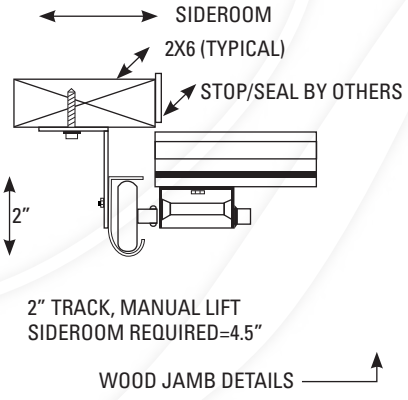

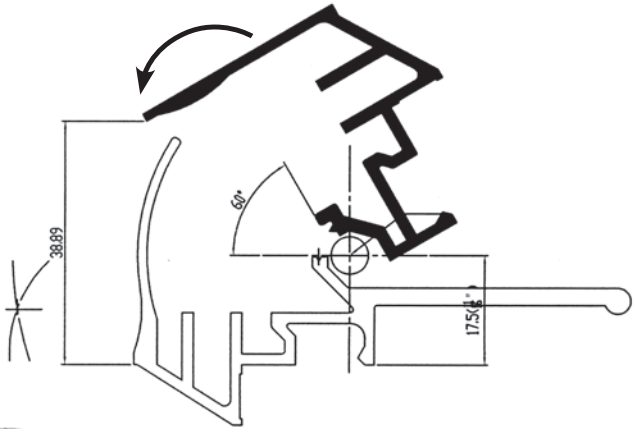

PART I STANDARD LIFT INSTALLATION

STEP 1

Hinges have numbers stamped into them for identification and their placement on the door is important. When attaching hinges to the door, make certain the number code is right side up. Use 1/4" x 1" tek screws to fasten hinges to **steel doors**. See Figure 3

Caution: Inspect sawhorse surface for objects that may scratch the finish of your door.

Lay bottom section face down on sawhorses.

STEP 2

Attach bottom brackets (left and right hand) to bottom of end stiles flush with bottom of section using 1/4" x 1" red tek screws. Secure the step plate above the right bottom bracket using 1/4" x 1" tek screws. See Figure 3A

Attach lower half of #1 hinges to the top of both end stiles and all intermediate stiles. Attach the lift handle to any intermediate stile. See Figure 3B

Place looped end of cable over lifting stud on bottom fixtures. See Figure 3C

The inside of the garage door opening should be framed with 2" x 6" wood jambs. Jambs should be plumb and square and extended to the top of the minimum headroom required. All jamb fasteners should be flush with jambs and securely anchored to the wall. **See Figure 1**

Headroom is defined as the measurement from the top of the door opening to the lowest obstruction, such as light fixtures, heat vents, etc.

Temporarily nail doorstops (supplied by installer) to jambs flush with the inside of the opening. This will prevent the sections falling through the opening as they are stacked. **See Figure 2**

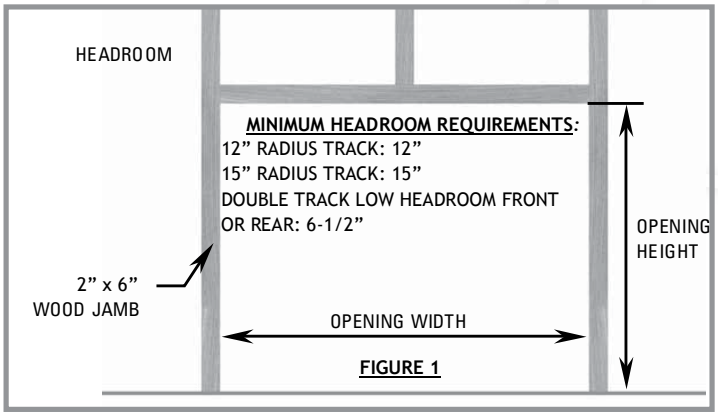

FIGURE 1

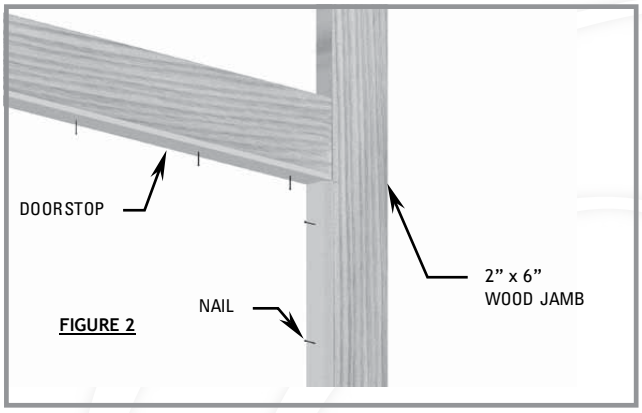

FIGURE 2

FIGURE 3

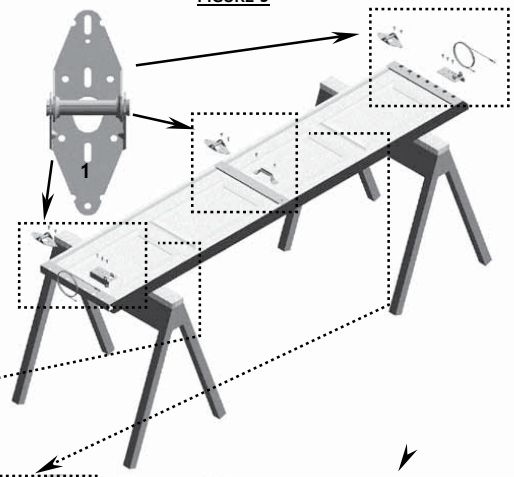

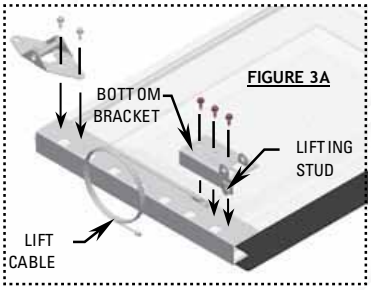

FIGURE 3A

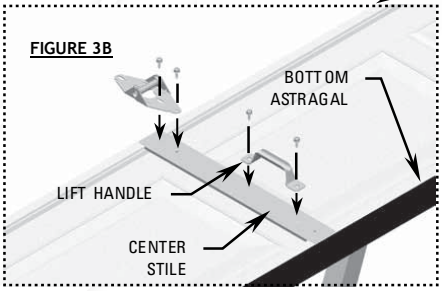

FIGURE 3B

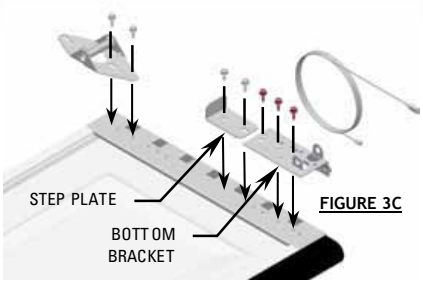

FIGURE 3C

(NOTE: USE 1/4" X 1" LAGS FOR WOOD DOORS)

Refer to Part VIII Strut Schedule for placement of reinforcement struts. Follow the appropriate schedule for the model purchased. See Figure 4

STEP 3

Place the bottom section in the opening against the doorstops and center it within the opening. Using shims if necessary, level section. See Figure 5 Using 20-penny nails, drive them part way into the doorjamb and bend them slightly around the section to hold it in place. Do this to each end of the section. Be sure the nails are driven firmly into the jamb. Fold the hinges inward to ease the stacking of the next section. Repeat this step as you stack each section in the opening. See Figure 5A

STEP 4

Place second section on saw horses. Attach lower half of #2 hinges to the top of both end stiles, and #1 hinges on the intermediate stiles. See Figure 6

STEP 5

The second section may now be stacked on top of the first section and secured with 20- penny nails. Flip up and secure the first row of hinges to the bottom of the second section. See Figure 7 & 7A

STEP 6

Repeat the procedure for the next section. Being the third section, #3 hinges are required on the tops of the end stiles, and continue using #1 hinges on the intermediate stiles. For each section added, verify end stile hinges are in ascending order. The top section will not have intermediate or end hinges.

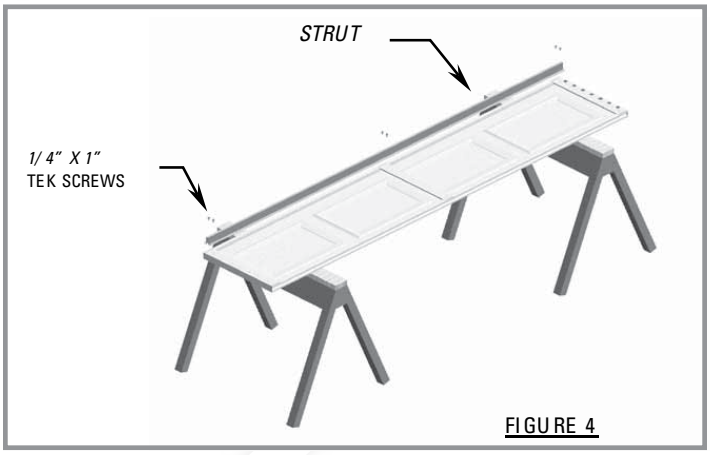

FIGURE 4

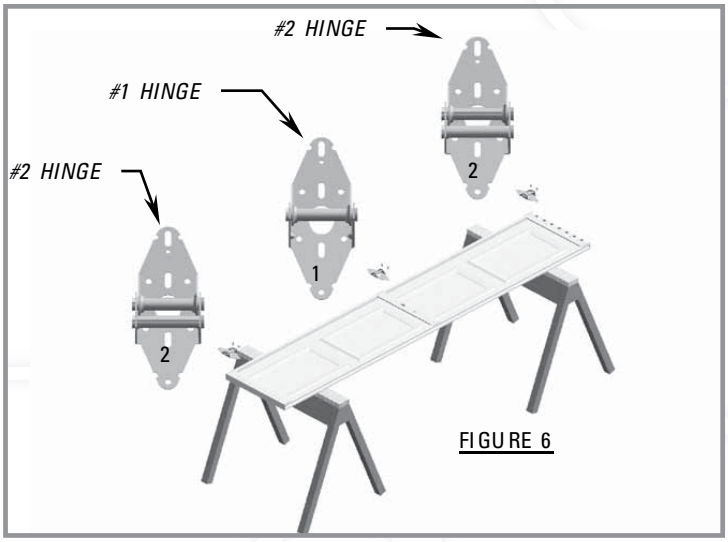

FIGURE 6

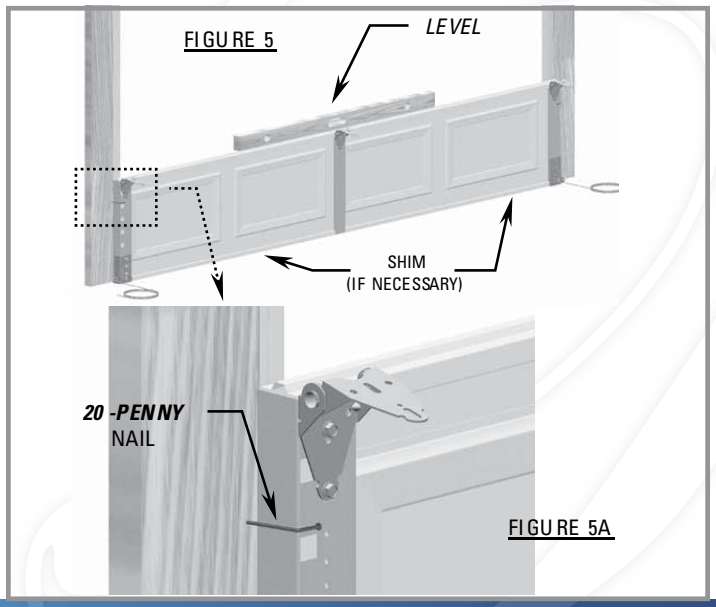

FIGURE 5A

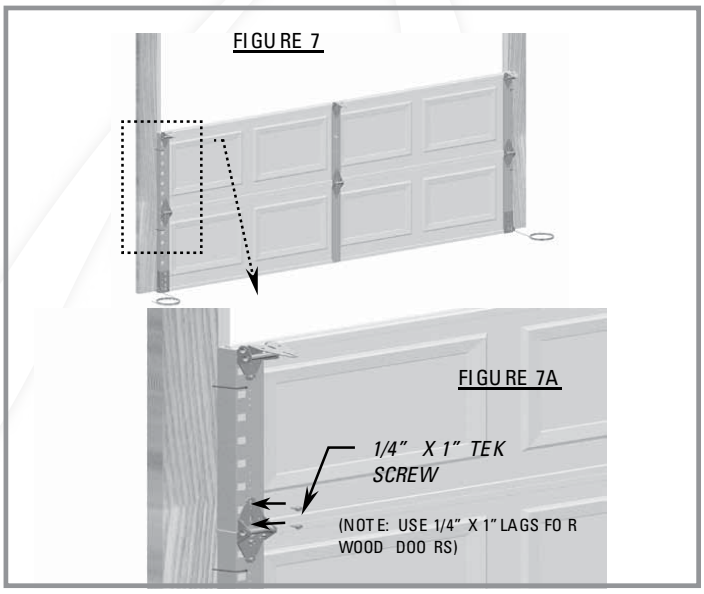

Overhead *French* Style Garage Doors

STEP 7

Place the top section face down on the sawhorses. If the door is to be motor operated, but no struts are included, an additional strut must be ordered for the top section. Install it along top rail, flush with the top edge of the section, using 1/4"x 1" tek screws. (If you have a wood door, refer to STEP 16 for installation of top fixture. Then return to this step for further instruction.) This section may now be stacked into the opening, secured with 20-penny nails and the remaining row of hinges should be flipped up and secured to the top section. See Figure 8 & 9

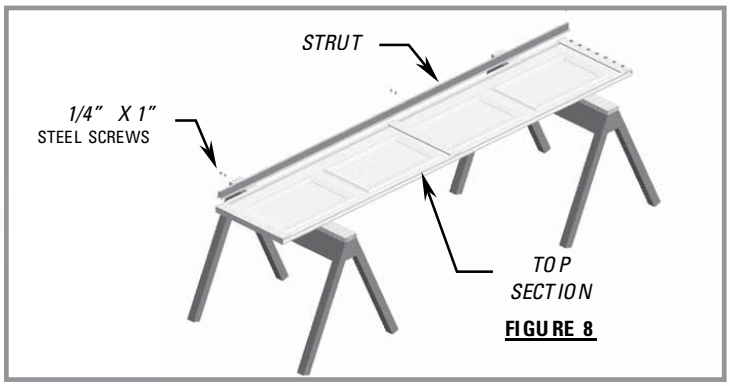

FIGURE 8

STEP 8

Insert the roller stems into the roller carriers of the hinges and bottom fixtures. See Figure 10 Route cable in front of rollers alongside the sections being sure to keep it from being pinched between the door and frame. Temporarily affix or hang the cable at the top of the door to keep it out of the way and prepared for attachment to the springing system in upcoming steps.

If you have requested adjustable track, the jamb brackets, flag brackets, track bolts and nuts will be in your hardware box. With the head of the bolt to the inside of the track, attach jamb brackets & flag brackets in the proper position of the vertical track.

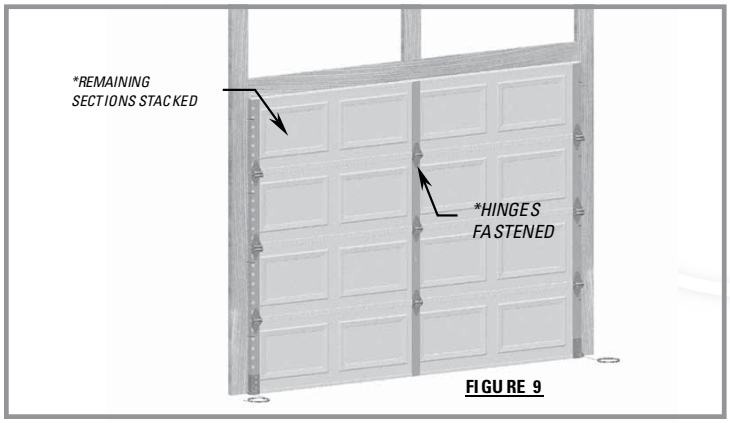

FIGURE 9

TEP 9

Hook vertical tracks (straight track) over rollers and swing them into position so the jamb brackets rest flush against the doorjamb. Raise and shim vertical tracks roughly 1/4" off the floor. The tops of the verticals must be level with each other. Since the bottom section has been leveled, you can level the vertical tracks by measuring from the top of the bottom section to the top of the vertical track. See Figure 11 & 11A

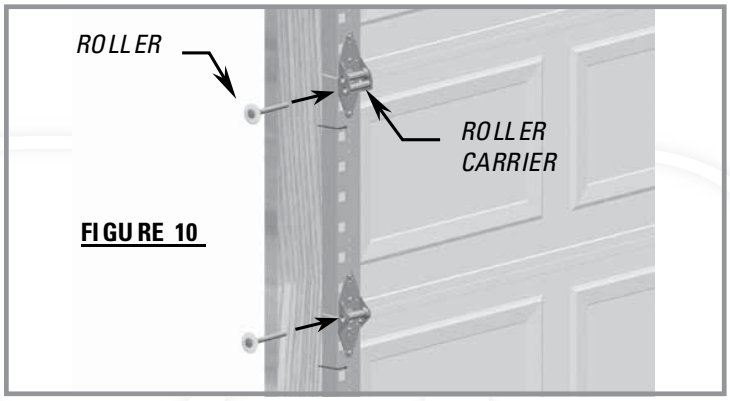

FIGURE 10

STEP 10

Keeping vertical tracks level with each other, and using 5/16" x 1-5/8" washer head lags, anchor them to the doorjambs leaving 1/4" clearance between the track and the bottom fixture, tapering up to 3/8" clearance between the track and the top section. See Figure 11A & 11B

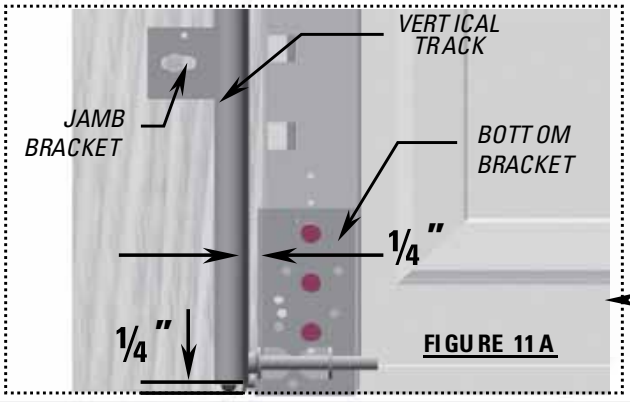

FIGURE 11A

FIGURE 11B

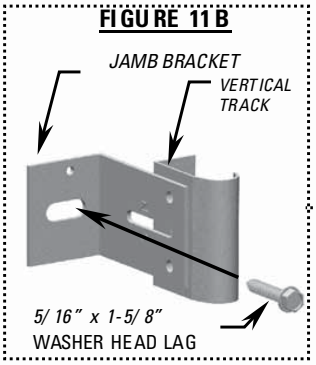

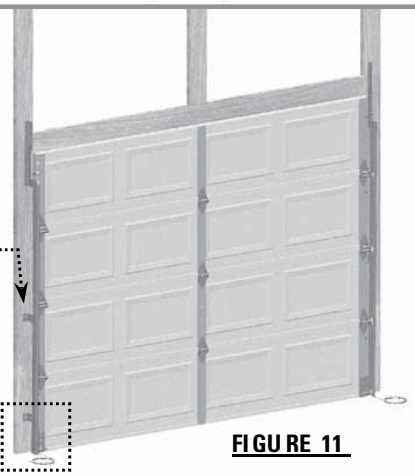
FIGURE 11

STEP 11

Using two 1/4" x 5/8" track bolts and 1/4" flange nuts, attach the curved end of the horizontal track to the flag bracket of the vertical track. When doing this, make sure the bolt heads are inside and the nuts are on the outside of the track. Also attach the horizontal reinforcement angle to the flag bracket with a 3/8" x 3/4" carriage bolt and flange nut. Temporarily suspend the back end of the horizontal track with a heavy rope or wire of sufficient size to safely support a weight of at least 300 pounds per side. See Figure 12

STEP 12

Position an end bearing plate against the inside of the horizontal reinforcement angle, and with the flange pointing away from the door and flush against the wood jamb extension, and fasten in place with 3/8" x 3/4" carriage bolts and flange nuts. Pilot drill a 1/8" hole through the mounting hole in the flange of the end bearing into the wood jamb extension and install a 5/16" x 1-5/8" washer head lag. Repeat the process on the opposite end of the door. See Figure 13

STEP 13

Lay the torsion tube across the sawhorses. Slip the springs, drums, and spring mount onto the shaft as shown in the drawing. Note that the red cable drums as well as springs with red winding cones are to be on the left side of the door and the black cable drums and springs with black winding cones are to be on the right side of the door. The side of the drum that has the setscrews should be towards the center of the door. Also note that the side of the spring mount with the notched corner will be downward to allow clearance for the door to pass without hitting the spring mount. See Figure 14

STEP 14

Lift the torsion assembly and put the left end of the torsion tube through the left end bearing, then line the right hand end of the torsion tube up with the right hand end bearing and pull the torsion tube back and through the right end bearing. The torsion tube should be centered with equal lengths of tube on each end of the door. See Figure 15

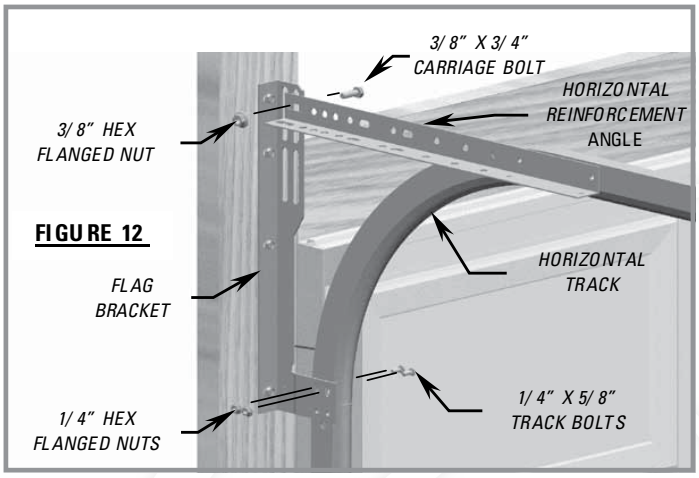

FIGURE 12

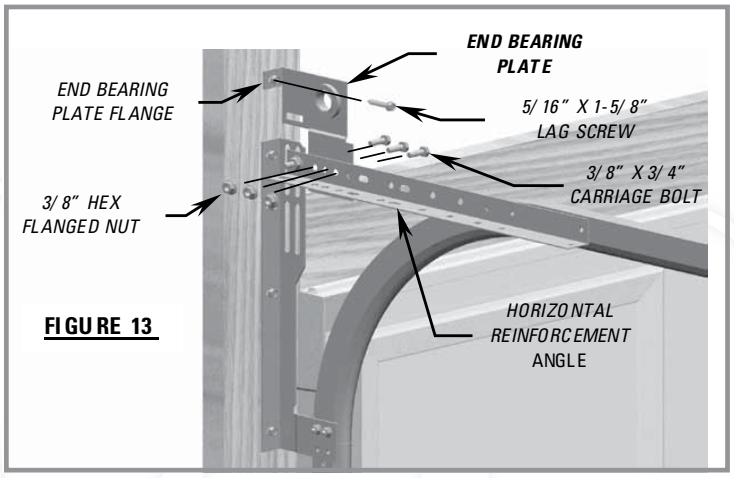

FIGURE 13

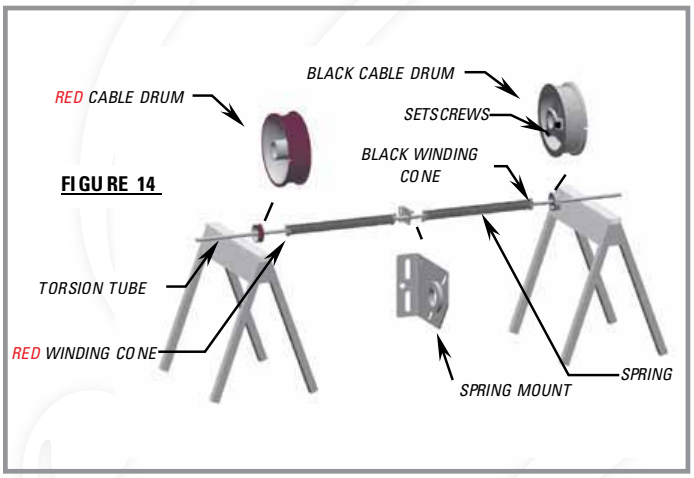

FIGURE 14

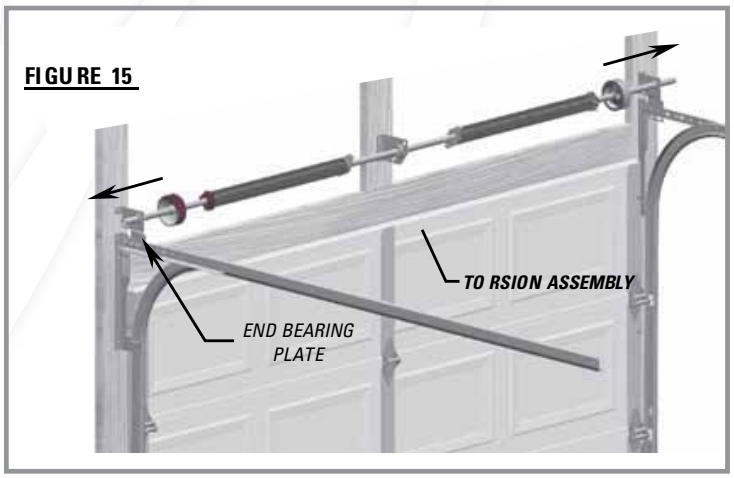

FIGURE 15

STEP 15

Next, with the mounting side of the spring mount flush against the header, raise the spring mount until the center of the torsion tube no longer sags and is level with the ends of the torsion tube. Pilot drill 1/8" holes into the wood header and anchor the spring mount to the wood header with 5/16" x 1-5/8" red washer head lags. Complete this assembly by using the 3/8" bolts and nuts to through bolt the springs to the spring mount. See Figure 16

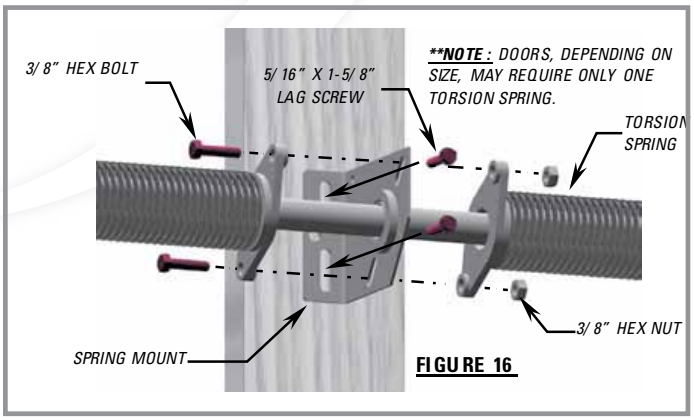

FIGURE 16

STEP 16

Insert the roller stem into an adjustable top fixture. Making sure the adjustable side of the top fixture is upward, wiggle the roller into the radius portion of the horizontal track and lower the fixture until the mounting holes in the fixture line up with a set of prepunched holes in the end stile. Placement of the top fixture is approximately 3" from the top of the section. Adjust the nut and bolt assembly of the top fixture so that the section is seated firmly against the header of the door opening. Complete this step by fastening the fixture in place with 1/4" x 1" tek screws. Repeat the procedure at the opposite end of the door. See Figure 17

STEP 17

Slide the red cable drum as far left as possible until it touches the end bearings. Carefully thread the left hand torsion cable up in between the end of the door and the vertical track, between the header and the cable drum, and hook the cable stop on the end of the torsion cable into the slot in the cable drum casting. Making sure the cable rests in the top groove of the cable drum, rotate the drum until the cable is tight and tighten the setscrews. Approximately 1-1/2 turns after screw touches the tube. Do not over tighten. Over tightening these screws may cause damage to the torsion tube and/or the cable drum. Apply vise grips to the torsion tube with the handle against the header to keep the torsion tube from turning, thus keeping the cable tight and in the groove of the cable drum. See Figure 18

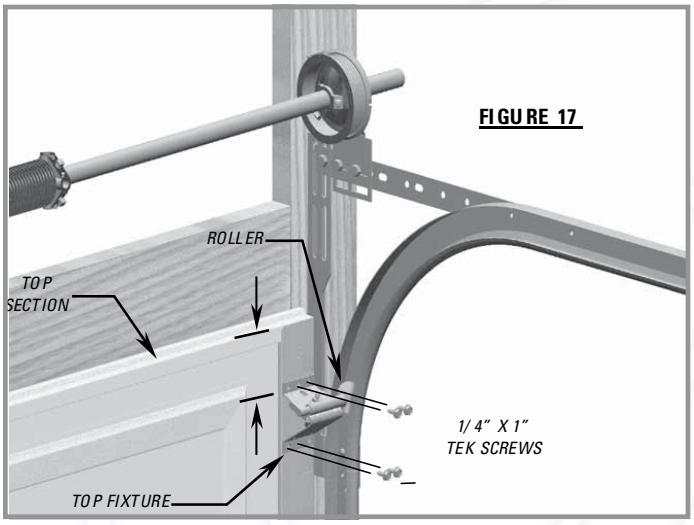

FIGURE 17



FIGURE 18

STEP 18

Repeat this procedure with the black drum. Check both torsion cables to insure they are both equally tight and tracking correctly in the grooves. Adjust as needed. Leave the vise grips in place to prevent the torsion tube from turning until the springs have been wound. See Figure 19

CAUTION: PLEASE READ STEPS 19 AND 20 VERY CAREFULLY!

TEP 19

Prior to winding the springs, insure that both cables are equally tight and the vise grips are still in place on the torsion tube.

DANGER: WINDING AND/OR ADJUSTING TORSION SPRINGS CAN BE EXTREMELY DANGEROUS IF IMPROPER TOOLS ARE USED OR EXTREME CAUTION IS NOT TAKEN. READ AND FOLLOW THESE INSTRUCTIONS VERY CAREFULLY.

To wind the torsion springs you will need two cold rolled steel winding bars 1/2" in diameter and at least 18" long. USING ANY OTHER TOOL FOR WINDING AND/OR ADJUSTING TORSION SPRINGS COULD DAMAGE THE WINDING CONE AND MAY CAUSE SEVERE INJURY OR DEATH. These winding bars are not furnished in the door package and should be available from your garage door dealer or a local hardware store. Mark springs with chalk line end to end for ease in counting turns.

STEP 20

Place one of the winding bars into a hole in the winding cone of the spring. Slowly and carefully rotate the bar UPWARD until you are able to insert the other winding bar into the next hole. While holding the tension of the spring with the lower winding bar, remove the upper winding bar and wind the spring another quarter turn. Repeat this process until the required number of turns are on the spring. While maintaining upward pressure on the winding bar, carefully tighten the setscrews in the winding cone. If your door has 2 springs, repeat this procedure on the other spring. See Figure 20

DANGER: ALWAYS MAINTAIN FULL
CONTROL OF THE WINDING BARS INSURING THE BARS ARE FULLY SEATED IN THE HOLES OF THE WINDING CONE. NEVER STAND IN LINE OR ALLOW ANYONE ELSE TO STAND IN LINE WITH THE WINDING CONE OR WINDING BARS WHEN WINDING THE SPRINGS OR MAKING ADJUSTMENTS.

NOTE: The amount of turns information is written on the hardware box at the factory. 1 turn is equal to 1 full revolution of the winding cone or 4 quarter turns.

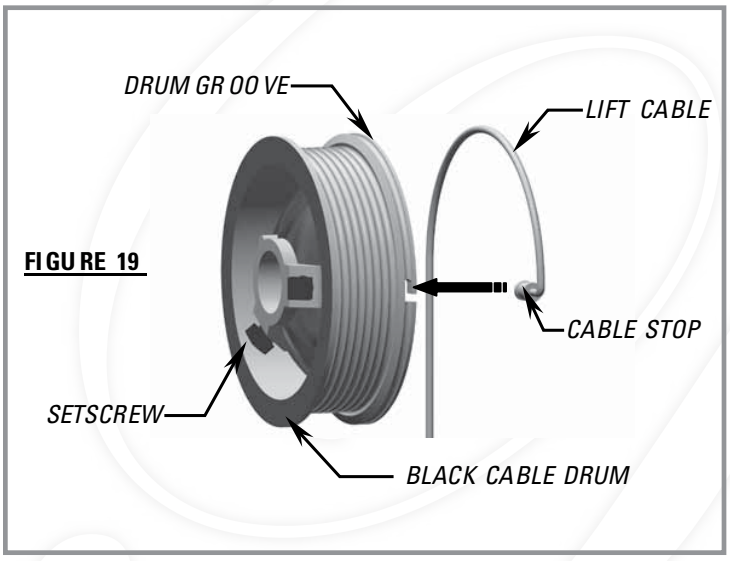

FIGURE 19

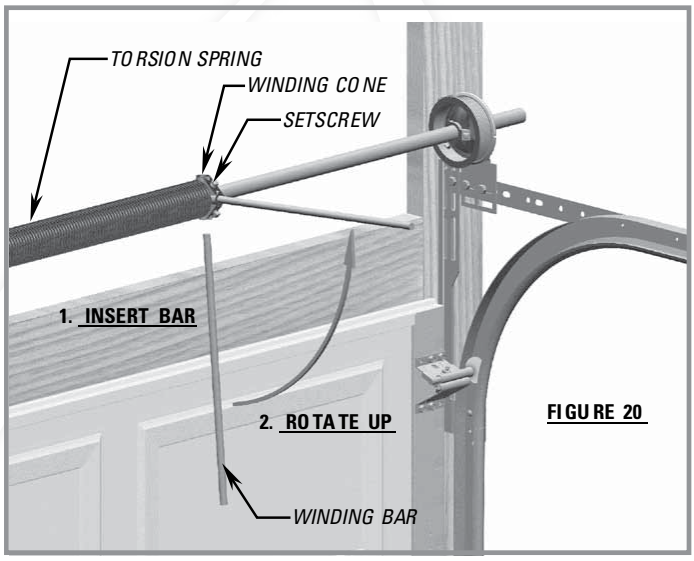

FIGURE 20

STEP 21

Remove the temporary nails holding the sections to the doorjamb. Also remove the vise grips from the torsion tube. Very slowly, lift the door half way up into the opening. Attach locking pliers to the vertical track directly under the bottom roller and another set above the 2nd roller to keep the door in this position. Keep the horizontal tracks within 1/2" of the end of the door to prevent the door from falling out of the tracks. While keeping the horizontal tracks level, anchor the rear of the horizontal tracks securely to the overhead building structure with steel track hangers fabricated from punched angle provided by the installer. See Figure 21

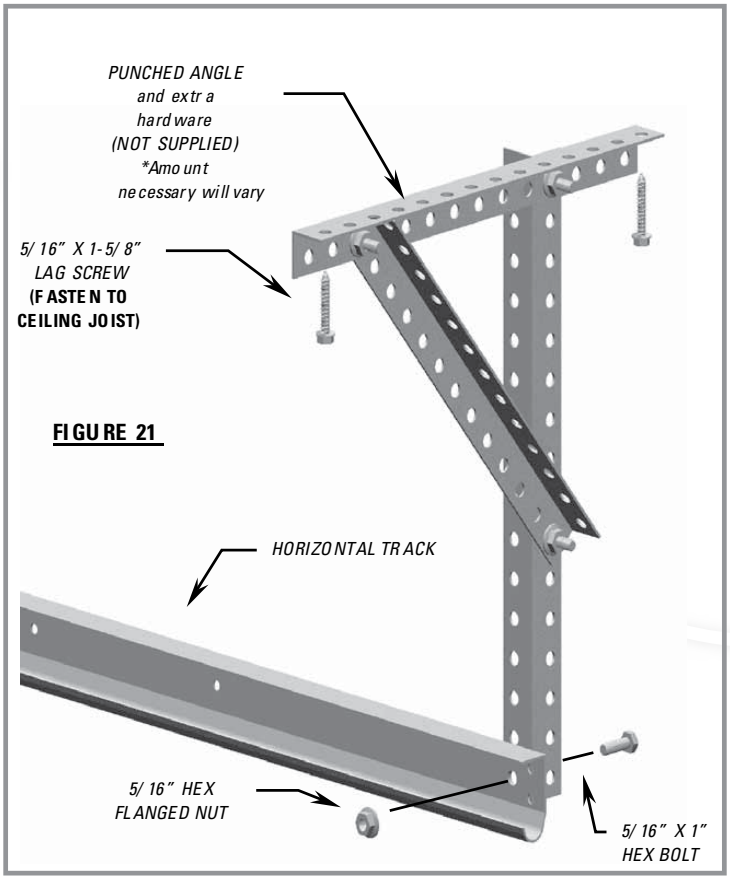

FIGURE 21

TEP 22

Test operate your door several times. Close it for the final steps.

STEP 23

Install the screw eye into the right hand jamb approximately 36" off the floor. Tie one end of the provided rope to this screw eye and the other end to the roller in the bottom fixture. This rope will help make closing the door manually easier. CAUTION: If an electric door operator is used on your door it is recommended that the pull rope not be installed. See Figure 22

TEP 24

Check end of sections to make sure they stand in a straight line. Adjust the top fixtures if needed. Reposition doorstops if necessary and nail them permanently in place. Nails should be spaced approximately 6-8 inches apart. Doorstops should be tight enough to provide a seal against the door but not so snug to impair the operation of the door. A light rubbing of paraffin wax on the rubber flap of the doorstop provides smoother door operation.

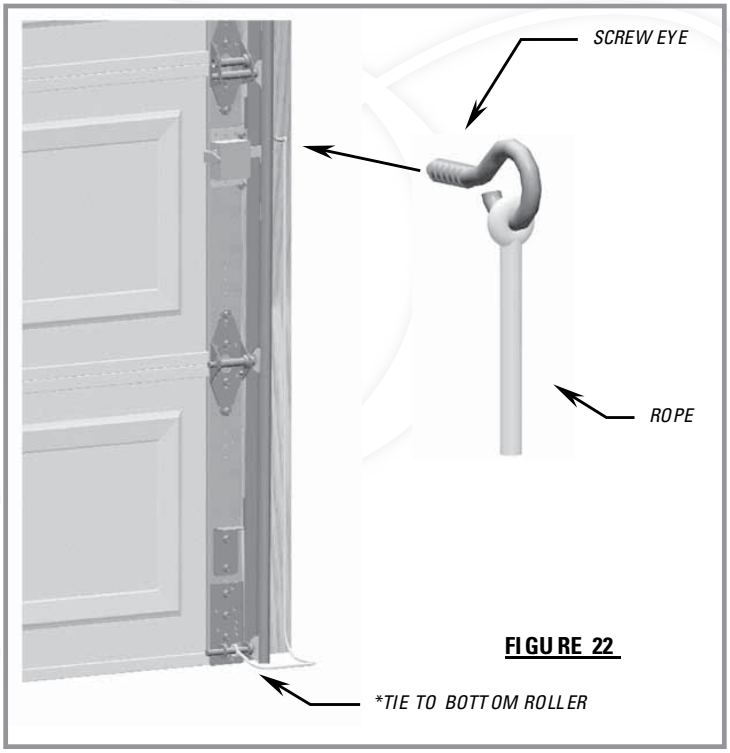

FIGURE 22

STEP 25

Apply all warning tags and labels to the inside of the door. These warn the installer and anyone operating or servicing the door of parts that are under high torque and should only be worked on by qualified door installers. See Figure 23

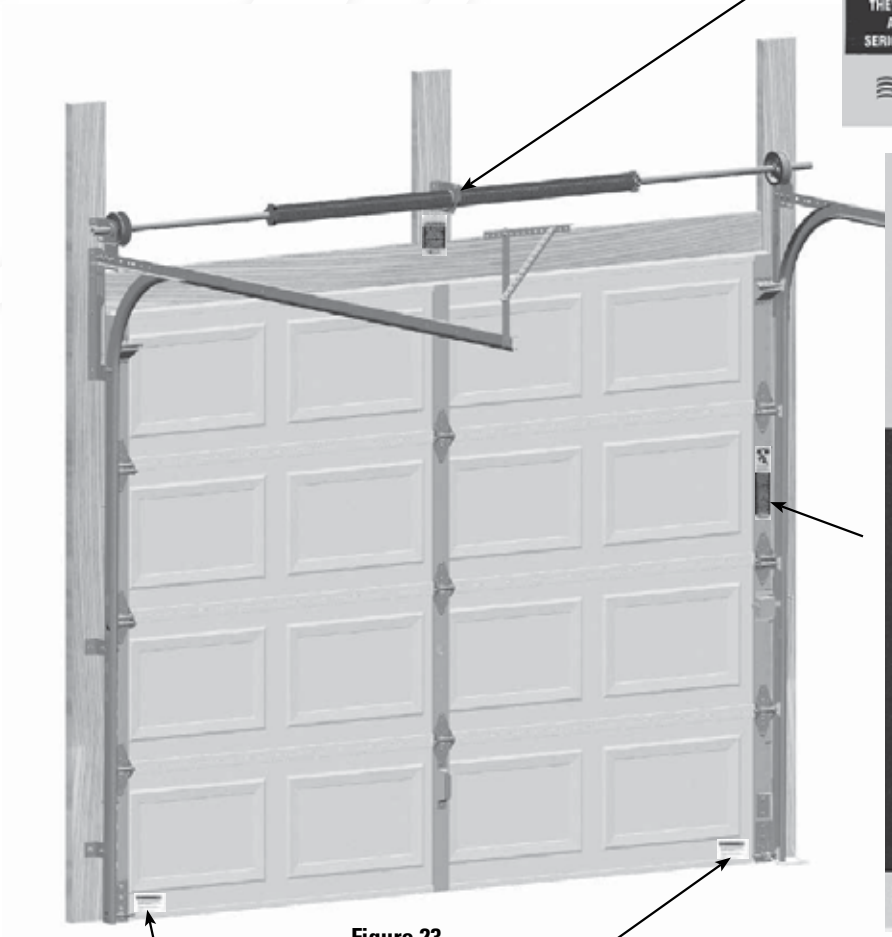

Figure 23



OR



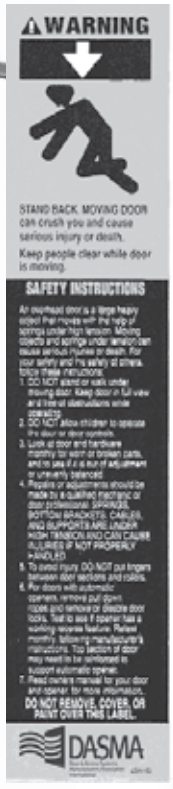

OR

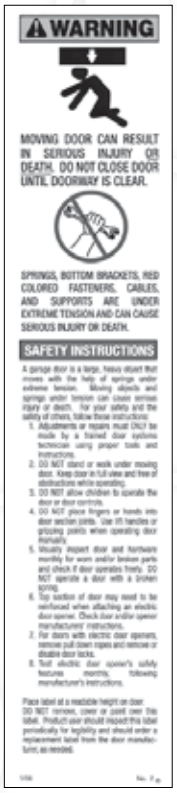



OR

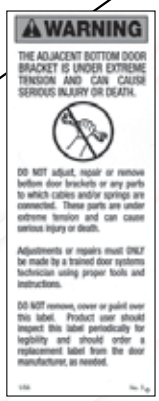



Place next to operator wall button.