LAUREL MOUNTAIN
WHIRLPOOLS

COLONY COLLECTION OWNER'S MANUAL

For your installation, operation, and maintenance needs.

Soaking Tubs

Laurel Mountain Whirlpools Service Center: 1-800-930-0050

VA3.14

Contents	Page	Contents	Page
Specifications	1	Plumbing Instructions	2
Rough In Instructions	2	Care & Cleaning	3
Electrical / Wiring	2	Extra Options / Features	3

About this Owner's Manual

Laurel Mountain Whirlpools has gained popularity by the variety of bathtubs available and the extensive list of options for each type of tub. This manual covers the installation, operation, and maintenance needs for all of the Colony Series Laurel Mountain soaker tubs. If you have any questions or need additional information on your Laurel Mountain Whirlpools bath, you can contact our customer service department at 1-800-930-0050 between 6:00 am and 6:00 pm EST Mon-Fri.

INSTALLATION WARNING SAFETY

Please follow these instructions to insure an easy and safe installation process. Any deviations, additions, or deletions to your Laurel Mountain Whirlpools tub or it's hardware will <u>void the warranty</u> of this product if written approval is not obtained from the manufacturer.

Use this tub for its intended purposes described in the manual. The manufacturer does not recommend using any attachments not specifically approved in this manual. DO NOT allow any electrical appliances near the bath tub. DO NOT use alcohol, drugs, or medication as this will greatly increase your risk of hypothermia or drowning. DO NOT allow children to use the bathtub without adult supervision. DO NOT use options NOT installed by the manufacturer. Do not use if you are or think you are pregnant, consult your physician before using the bath tub.

Specifications

Your Laurel Mountain Whirlpools unit was created to your order specifications. The tub was constructed from an acrylic shell cast. It was then reinforced with a mixture of chopped fiberglass in a polyester resin applied to the backside of the shell. The base of your unit was designed to give uniform support to the tub floor and has been pre-leveled. It meets or exceeds load-bearing and impact resistance requirements of the listed standard without evidence of crazing or cracking and with minimal deflection when installed in accordance to Laurel Mountain Whirlpools printed instructions.

<u>PRIOR TO INSTALLATION</u>

Immediately inspect your tub upon arrival. If any damage has occurred, make a notation on the freight carrier's proof of delivery. DO NOT remove the bath from its shipping container until you are ready to install. Be sure the drain and overflow fit properly prior to installation. We also recommend cutting cardboard from the shipping container to place inside the tub to protect its floor. Any defects that are discovered **<u>MUST</u>** be reported at this time to qualify for warranty coverage. Qualified plumbers **<u>MUST</u>** be used for all tub connections to assure you follow local codes and acquire any permits required for the install.

Framing-In Your Bath

*It is **VERY** important that your tub is supported by its base and not the rim.

*Take your installation measurements directly from your tub, as they may vary slightly from our literature.

When installing the drain fitting, you will notice it protrudes below the bottom of the tub. You will need to allow clearance in the sub-floor for this dimension. Now you are ready to place your tub in its desired location. Check the unit and sub-floor to ensure it is level. If it is not, insert wood shims between the sub-floor and support base. Mark stud wall underneath the tub's return lip. Remove the unit from position and install a 1x stop to stud wall for lip to rest on to prevent deflection.

Since a great variety of installations are possible with this bath, special framing procedures may be needed. A ledge under the rim, or an apron without a ledge, may be constructed as required. Where installation is planned against a wall, install the tub against the studs as indicated, adding blocking below the rim to prevent deflection or movement of the tub, but ensuring that the weight of the tub is not supported in any way by the blocking. (Diagram A) When placing the unit in a platform floor or cut out installation, the opening should be 1" smaller than the specified rim dimensions.

A 1" integral up-flange is available on many rectangular and corner models. These units should be placed in a pre-measured studded pocket. Pre-drill holes through the flange to align with studs. Use screws to secure to studs (Diagram B). **DO NOT** attempt to nail directly through the flange. **Always pre-drill the holes**.

Diagram A

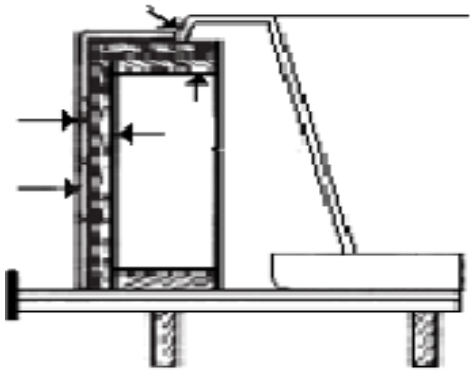

Diagram B

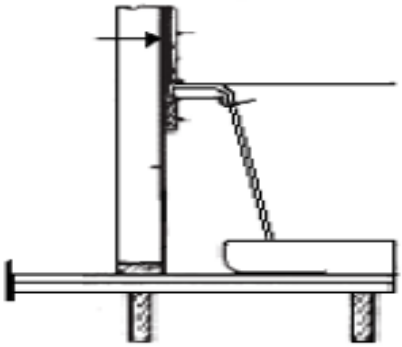

Electrical & Wiring Instructions for Options

Rough in the wiring on a single 120VAC, 20 amp, GFCI protected dedicated circuit for each accessory installed on the tub.

WARNINGS:

1) All electrical connections must be made by a licensed certified electrician in accordance with the requirements of the National Electrical Code and applicable state and local codes and procedures.

2) All circuits connected to this unit must be equipped with Ground Fault Circuit Interrupter (GFCI) protection. It is the tub installer's responsibility to wire the circuit with GFCI.

3) All bathtubs equipped with a heater require a dedicated circuit for the heater.

4) DO NOT splice a longer cord to the power supply cord and DO NOT connect to an extension cord.

The heater is equipped with a molded plug on the end of a power supply core. Also, the power supply cord is is only 2.5' long so locate the GFCI wall outlet within 1.5' of the heater.

Please note, that when sizing the electrical circuits to power the unit, you should always check the rating labels on equipment because there could be changes.

Water Heater for Soaker Tubs – LM305 - 12.5 Amps, LM306 - 16.0 Amps

The on/off button on the bath tub activates/deactivates the heater. The heater has a built-in 20 minute timer and is a low flow/high efficiency pump, providing silent operation. The option is equipped with a molded plug on the end of a power supply cord. Check your local codes. For the LM305 install a 120 VAC 15amp GFCI, and for the LM306, install a 250 VAC 25amp GFCI. Both water heaters should have a GFCI protected dedicated circuit wall outlet located within 1.5' from the heater unit. Plug the cord into the outlet. This heater is designed to MAINTAIN the temperature in your bath water between 101-104 deg Fahrenheit. These temperatures are preset and cannot be adjusted.

Chromotherapy Mood Light – LM522

The ColorGlo LED Multi-Color bath light comes pre-programmed with 10 light modes. To change modes, switch the unit off and then back on within 5 seconds. To resume a lighting mode, leave the unit switched off to save the last lighting mode displayed in memory. That same lighting mode will display the next time the unit is switched on. DO NOT attempt to service the electronic components yourself. Any opening, altering or tampering with this product will void the manufacturer's warranty. DO NOT submerge the transformer in water or allow it to get wet. Keep the unit dry at all times. DO NOT allow this unit to freeze.

Plumbing Installation

Install fill valves and spout in the desired locations. Note, due to various possible fill valve and spout locations, the holes are not drilled at the factory. Make certain that the spout is long enough to clear the interior rim of the tub. If installing fill valves on the deck of the tub, be sure that you have enough clearance for connections of valve to tub and water connections before drilling/cutting into tub. Seal the joints under the tub rim and against the wall with a water resistant seal. Then install a standard 1.5" trap to the drain and overflow. Complete the installation with desired trim material on the back wall, side walls, and down exposed interior walls. Laurel Mountain Whirlpools will not be held responsible for water damage of any kind in connection with the installation and/or operation of one of our bathtubs.

Care & Cleaning Instructions

Your bath has an acrylic finish and will retain its high luster for years with proper care. Never use an abrasive cleaner or pad to clean your bath tub. Always use a soft cloth or sponge along with a spray liquid non-abrasive bath cleaner/disinfectant.

Laurel Mountain Whirlpools Warranty

This Laurel Mountain Whirlpools bath is warranted to the original purchaser to be free from defects in material and workmanship for the following periods. The bathtub shell carries a lifetime limited warranty. The heater has a limited 10 year warranty. All other parts have a limited 5 year warranty. Proof of purchase is required. This warranty is issued to the original purchaser and shall be effective from the date of purchase as shown on purchaser's receipt. Laurel Mountain Whirlpools will repair or replace (at their choice) any unit which proves to be defective in material or workmanship under normal use and service, having been properly installed. This warranty is the only express warranty made by Laurel Mountain Whirlpools and is limited to the duration of this warranty. Any labor charges and/or damage incurred in installation, repair or replacement as well as incidental and consequential damages connected therewith are excluded and will not be paid by Laurel Mountain Whirlpools. Some states do not allow the exclusion or limitation of incidental or consequential damages, so the above limitation or exclusion may not apply to you. This warranty is void for any damage to the bath due to abuse, misuse, neglect, accident, improper installation, any use violating instructions furnished by us, or repair not authorized in writing by Laurel Mountain.