Grass Shear/Shrubber

Model No. HJ602C

Form No. SJ-HJ602C-880E

A Division of Snow Joe, LLC

OPERATOR'S MANUAL

IMPORTANT!

Safety Instructions

All Operators Must Read These Instructions Before Use

Always follow these safety guidelines. Failure to do so may result in serious bodily injury or death.

General Power Tool Safety Warnings

⚠ WARNING

Read all safety warnings and all instructions

Failure to follow all warnings and instructions may result in electric shock, fire or serious injury.

Save all warnings and instructions for future reference

The term "power tool" in the warnings refer to your operated (corded) power tool or battery operated (cordless) power tool.

1) Work Area

a) **Keep work areas clean and well lit.** Cluttered and dark areas invite accidents.

b) Do not operate power tools in explosive atmospheres, such as in the presence of flammable liquids, gases, or dust. Power tools create sparks which may ignite the dust or fumes.

2) Electrical safety

a) **Power tool plugs must match the outlet. Never modify the plug in any way. Do not use any adapter plugs with earthed (grounded) power tools.** Unmodified plugs and matching outlets will reduce risk of electric shock.

b) **Avoid body contact with earthed or grounded surfaces such as pipes, radiators, ranges and refrigerators.** There is an increased risk of electric shock if your body is earthed or grounded.

c) **Do not expose power tools to rain or wet conditions.** Water entering a power tool will increase the risk of electric shock.

d) Do not abuse the cord. **Never use the cord for carrying, pulling, or unplugging the power tool. Keep the cord at a distance from heat, oil, sharp edges or moving parts.** Damaged or entangled cords increase the risk of electric shock.

1. Avoid Dangerous Environment – Don't use hedge trimmers in damp or wet locations.
2. Don't Use In Rain.
3. Keep Children Away – All visitors should be kept a distance from work area.
4. Dress Properly – Do not wear loose clothing or jewelry. They can be caught in moving parts. Use of rubber gloves and substantial footwear is recommended when working outdoors. Wear protective hair covering to contain long hair.
5. Use Safety Glasses – Always use face or dust mask if operation is dusty.
6. Use Right Appliance – Do not use appliance for any job except that for which it is intended.
7. Avoid Unintentional Starting – Don't carry plugged-in hedge trimmer with finger on switch. Be sure to switch is off when plugging in.
8. **Danger** – Risk of Cut – Keep Hands Away From Blades – Keep both hands on handles when power is on. Do not attempt to remove cut material nor hold material to be cut when blades are moving. Make sure trimmer switch is off when clearing jammed material from blades. Do not grasp the exposed cutting blades or cutting edges when picking up or holding the hedge trimmer. **Caution** – blades coast after turn off.
9. Don't Force Hedge Trimmer – It will do the job better and with less likelihood of a risk of injury at the rate for which it was designed.
10. Don't Overreach – Keep proper footing and balance at all times.
11 Stay Alert – Watch what you are doing. Use common sense. Do not operate hedge trimmer when you are tired.
12. Store Idle Hedge Trimmer Indoors – When not in use, hedge trimmer should be stored indoors in dry, and high or locked-up place – out of reach of children.
13. Maintain Hedge Trimmer With Care – Keep cutting edge sharp and clean for best performance and to reduce the risk of injury. Follow instructions for lubricating and changing accessories. Inspect hedge trimmer cord periodically, and if damaged, have it repaired by an authorized service facility. Inspect extension cords periodically and replace if damaged. Keep handles dry, clean, and free from oil and grease.
14. Check Damaged Parts – Before further use of hedge trimmer, a guard or other part that is damaged should be carefully checked to determine that it will operate properly and perform its intended function. Check for alignment of moving parts, in binding of moving parts, breakage of parts, mounting, and any other condition that may affect its operation. A guard of other part that is damaged should be properly repaired or replaced by an authorized service centre unless indicated elsewhere in this manual.

© 2010 by Snow Joe, LLC
All rights reserved. Original instructions.

SAVE THESE INSTRUCTIONS

15. Do not charge hedge trimmer in rain, or in wet locations.
16. Do not use battery-operated hedge trimmer in rain.

3) Personal safety

a) **Stay alert, watch what you are doing and use common sense when operating a power tool. Do not use a power tool while you are tired or under the influence of drugs, alcohol or medication.** A moment of inattention while operating power tools may result in serious personal injury.

b) Always wear Personal Protective Equipment (PPE). This includes, but is not limited to, eye protection, dust mask, and hearing protection.

c) Avoid accidental starting. **Ensure the switch is in the off position before plugging in.** Carrying power tools with your finger on the switch or plugging in power tools that have the switch on invites accidents.

d) Remove any adjusting key or wrench before turning the power tool ON. A wrench or a key left attached to a rotating part of the power tool may result in personal injury.

e) Do not overreach. **Ensure you always have proper footing and balance.** This will provide better control of the power tool in unexpected situations.

f) **Do not wear loose clothing, or jewelry. Keep your hair, clothing and gloves away from moving parts.** Loose clothes, jewelry or long hair can be caught in moving parts.

g) If devices are provided for the connection of dust extraction and collection facilities, ensure these are connected and properly used. Use of these devices can reduce dust related hazards.

4) Use and Care

a) **Do not use the Grass Shear/Shrubber for applications that are beyond it's capacity. Use the correct power tool for your application.** The correct power tool will do the job better and safer at the rate for which it was designed.

b) Do not use the tool applications if the switch does not turn it ON and OFF. Any power tool that cannot be controlled with the switch is dangerous and must be repaired.

c) Disconnect the plug from the power source before making any adjustments, changing accessories, or storing power tools. Such preventive safety measures reduce the risk of starting the tool accidentally.

d) Store the tool out of the reach of children. **Do not allow people unfamiliar with the tool or these instructions to operate the tool.** Power tools are dangerous in the hands of untrained users.

e) Always maintain the Grass Shear/Shrubber. **Check for misalignment, binding of moving parts, breakage and other conditions that would affect it's operation. If damaged, have the tool repaired before use.** Many accidents are caused by poorly maintained power tools.

f) Keep cutting attachments sharp and clean. Properly maintained cutting attachments with sharp cutting edges are less likely to bind and are easier to control;

g) **Only use the tool, accessories, and attachments as described in these instructions.** Using the tool for operations it is not intended for could cause damage to the tool and hazardous situations. Always consider the working conditions and the work to be performed.

5) Battery use and care

a) **Always recharge the battery with the charger specified by the manufacturer.** A charger that is suitable for one type of battery pack may create a risk of fire when used with another battery pack.

b) Only use battery packs that designated for this tool. Use of any other battery packs may create a risk of injury and fire.

c) When the battery pack is not in use, keep it at a distance from other metal objects, such as paperclips, coins, keys, nails, screws or other small metal objects that can make a connection from one terminal to another. Shorting the battery terminals together may cause burns or a fire.

d) Under abusive conditions, liquid may be ejected from the battery; avoid contact. **If contact accidentally occurs, flush with water. If liquid contacts eyes, additionally seek medical help.** The liquid ejected from the battery may cause irritation or burns.

6) Service

a) **Have the tool serviced by a qualified repair person using only manufacturer's recommended replacement parts.** This will ensure that the safety of the tool is maintained.

Shrubber safety warning

- **Keep all parts of the body a safe distance from the cutter blade. Do not remove cut material or hold material to be cut when blades are moving. Ensure the switch is off when clearing jammed material.** Lack of attention while operating the tool may result in serious personal injury.
- Carry the machine by the handle with the cutter blade stopped. **Use the cover when transporting or storing the tool.** Proper handling of the machine will reduce possible personal injury.
- **During Operation, hidden objects in shrubs like wire and cables, can be accidently cut by the blade.**

Grass Shear safety warning

- Keep supply and extension cords at a distance from cutting attachment.
- Only use the tool in daylight or good artificial light
- Before turning the tool ON and during operation, ensure all body parts are at a safe distance from the cutting attachment.
- Always disconnect the tool from the power supply (i.e. remove the plug from the outlet or remove the disabling device).
  - Whenever leaving the tool unattended
  - Before clearing jammed material
  - Before checking, cleaning or working on the tool
  - After striking a foreign object
  - Whenever the tool starts to vibrate abnormally
- Always ensure the ventilation openings are clear of debris.
- Never allow people unfamiliar with these instructions or children to use the machine. Local regulations can restrict the age of the operator.
- Keep in mind that the operator or user is responsible for accidents or hazards occurring to other people or their property.
- Never operate the tool while people, especially children, or pets are nearby.
- Wear eye protection and shoes at all times while operating the tool.
- Only use the manufacturer's recommended replacement parts and accessories
- Inspect and maintain the tool regularly. Have the tool repaired only by an authorized repair center.
- When not in use, store the tool out of the reach of children.

Battery/battery charger safety warnings

- **Protect the battery charger from rain and moisture.** The penetration of water in a battery charger increases the risk of electric shock.
- Always recharge the battery with the charger specified by the manufacturer. A charger that is suitable for one type of battery pack may create a risk of fire when used with another battery pack.
- Do not charge other batteries. The battery charger is suitable only for charging lithium batteries within the listed voltage range. Otherwise there is danger of fire and explosion.
- Keep the battery clean. Contamination may cause the danger of electric shock.
- Check the battery charger, cable, and plug each time before using. **Do not use the battery charger when defects are detected. Do not open the battery charger yourself and have it repaired only by qualified personnel using original spare parts.** Damaged battery chargers, cables, and plugs increase the risk of electric shock.
- Do not operate the battery charger on easily inflammable surfaces (e.g. **paper, textiles, etc.) or in combustible environments.** Heat from the battery charger may ignite flammable materials or combustible vapors.
- Under abusive conditions, liquid may be ejected from the battery; avoid contact. **If contact accidentally occurs, flush with water. If liquid contacts eyes, additionally seek medical help.** The liquid ejected from the battery may cause irritation or burns.
- Do not open the battery yourself. There is danger of a short circuit.
- Protect the battery against heat, e.g., **including against continuous sun irradiation and fire.** There is a danger of explosion.
- Do not short-circuit the battery. There is a danger of explosion.
- Damage and improper use of the battery may cause vapors to be emitted. The vapors can irritate the respiratory system. If vapors are emitted, provide fresh air and call a physician.

Explanation of symbols:

Symbol	Description
	Read instruction manual.
	Do not expose to rain.
	Only use the battery charger indoors.
	Battery charger contains a safety transformer.
	Warning! The cutting attachment continues to move after the motor is switched OFF.
	Keep the bystander away

Know Your Cordless Grass Shear/Shrubber

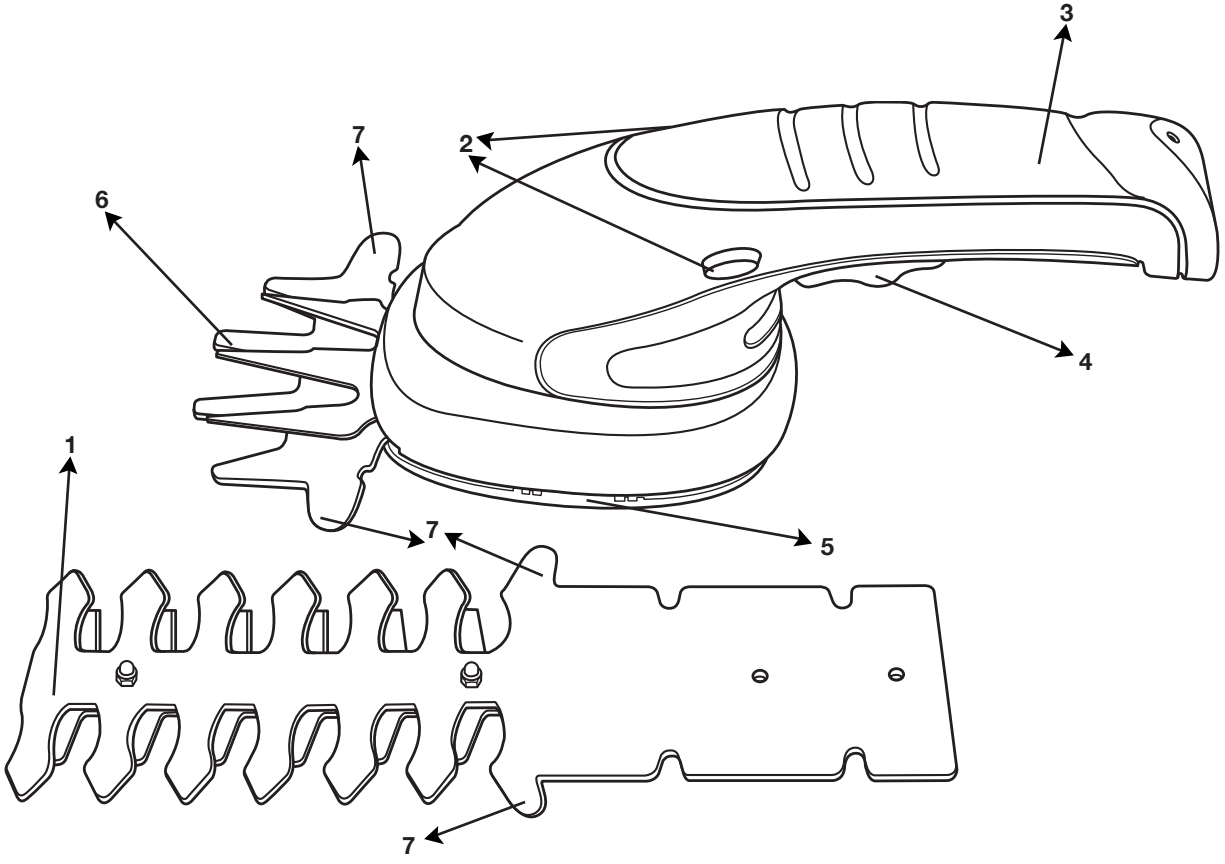

1. **Shrubber attachment**
2. **Safety Switch**
3. **Handle**
4. **ON/OFF Trigger Switch**
5. **Drive cover**
6. **Shear attachment**
7. **Safety Ears**

Technical Data

Rated voltage	DC 3.6V
Rated no-load speed	900/min
Blade width	3.31 inches for Grass Shear
Blade length	5 inches for Shrubber
Weight	1.98lbs/0.9kg
L_{PA}:	59.8dB
Guaranteed LWA:	81dB
L_{PA} (at operator position):	76.4dB
Vibration:	0.952m/s2
Charging time (empty battery)	3h
Battery type	li-ion
Battery voltage	3.6V
Battery capacity	1500mAh
Charger:	LK-DC060060, input: AC 120V, 60Hz, output: DC 6V, 600mA

Assembly

Unit comes completely assembled with Grass Shear blade attached.

Intended use

The product is intended for Light trimming of shrubs and lawn edges in domestic use.

Introduction

This manual gives instructions on the correct assembly and safe use of your Grass Shear/Shrubber. It is important that you read these instructions carefully.

Unpacking

The contents of the carton includes:

- (1) HJ602C Unit with Shear Attachment
- (1) Shrubber Attachment
- (1) Battery Charger

When parts are missing or damaged, please contact Snow Joe customer service at 1-866-766-9563.

For your safety

⚠ **WARNING Turn OFF the tool before adjusting or cleaning. The blades continue to move for a few seconds after the tool is switched OFF. Caution! Do not touch the moving blades.**

Before use

Charging procedure

The battery charger supplied matches to the li-ion battery installed in the tool. Do not use other battery chargers.

The li-ion battery is protected against deep discharging. When the battery is empty, the machine is switched OFF by a protective circuit. The blade no longer moves and a slight whistling sound can be heard.

⚠ **If the ON/OFF switch is subject to continued use, the li-ion battery can be damaged.**

The charging process starts as soon as the charger is plugged into a proper outlet and the tool.

- During the charging procedure, the handle of the tool warms up. This is normal.
- When not using for extended periods, disconnect the battery charger from the outlet.
- Do not use the tool during the charging procedure.

Starting and Stoppoing

Starting: (Refer to diagram on page 5)

1) Push in the safety switch and hold (Feature #2)
2) Press in ON/OFF trigger switch (Feature #4).
3) Release the safety switch (Feature #2)

Stopping:

1) Release the ON/OFF trigger switch (Feature #4)

⚠ Working instructions

Hold tool at a distance from yourself. Stand in a secure and stable position.

Cutting hedges/Shrubber

Before cutting check the hedge/shrubber for foreign object; e.g., wire fences.

Cut stems up to 0.315 inches in thickness. When cutting, move steadily along the line of cut, so that stems are fed directly into the cutter blades. The double edge of the cutting blade enables cutting to either direction, or with a side to side motion. After use place the blade transport guard on the blade.

Recommended cutting/trimming times:

– Cut hedges with deciduous leaves in June and October.
– Cut evergreen hedges in April and August.
– Cut conifer and other fast growing shrubs approx. every six weeks from May onwards.

Maintenance

To ensure long and reliable service, do the following maintenance regularly.

– Check for obvious defects such as loose, dislodged or damaged blade, loose fittings and worn, or damaged components.
– Check that covers and guard are undamaged and correctly fitted. Complete necessary maintenance or repair before using.
– If the machine should happen to fail despite the care taken in manufacturing and testing, repair should be carried out by an authorized customer service agent.

Blade maintenance

Always clean the cutting blades after operation and lubricate. During longer cutting jobs, we recommend periodically lubricating the cutting blade.

NOTE: We recommend a SAE-30 oil for lubricant. Use a light coat.

Changing the blade

⚠ **Wear gloves when changing the blade. Always handle the blade by the safety ears, see Fig. C. Follow these easy steps:**

Removing

A Push the drive cover release button (K) and slide the cover (5) towards the ON/OFF trigger switch (4).

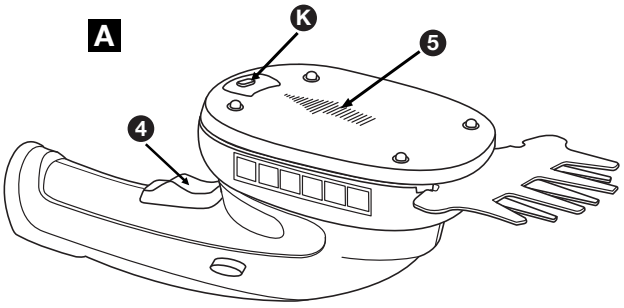

B Lift the cover away from the housing.

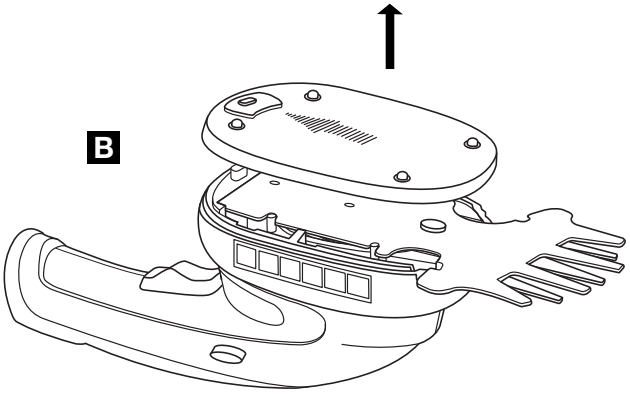

C Lift the blade out by the Safety Ears.

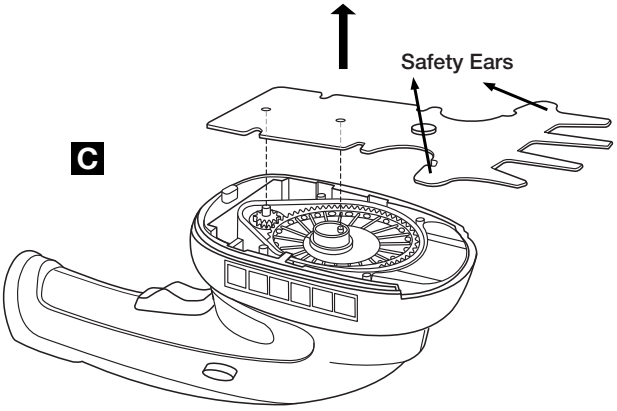

Fitting

D Position the blades as shown aligning the holes in the blade onto the drive pins. Verify the rear part of blade is tucked under the rear housing tabs (6). This will ensure a perfect alignment.

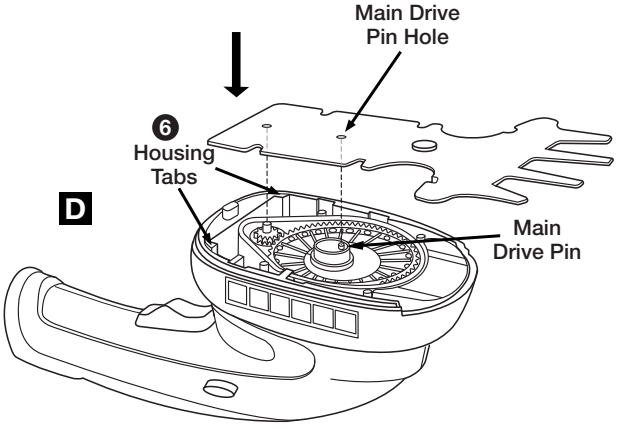

PLEASE NOTE: When changing from Grass Shear blade to Shrubber blade and back, please follow these **TIPS**.

E When refitting the drive cover ensure all four location legs are properly lined up with the blade.

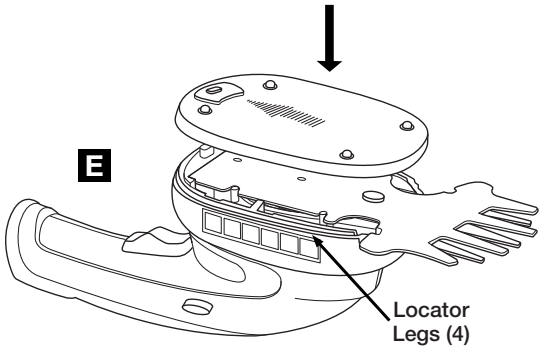

F Slide the blade cover towards the blade to secure.

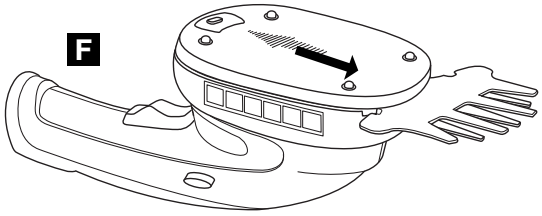

Cleaning/storage

Clean the exterior of the tool thoroughly using a soft brush and cloth. Do not use water, solvents or polishes. Remove all debris, especially from the ventilation slots.

Store the tool in a secure dry place out of reach of children. Do not place other objects on top of the tool.

Service

If your cordless Grass Shear/Shrubber requires service or maintenance, please call 1-866-766-9563 for assistance.

Model and Serial Numbers

When contacting the company or reordering parts, you will need to provide the model and serial numbers of your product. These are found at the bottom of your Cordless hedge Grass Shear/Shrubber. Copy these numbers into the space provided below.

Record the following numbers from the housing or handle of your new product:

Model #:

H | J | 6 | 0 | 2 | C

Serial #:

NOTES

A Two-Year Full Warranty for residential use in the United States and Canada

General Conditions:

Snow Joe, LLC warrants this product to the original purchaser for two years against defects in material or workmanship when used for normal residential purposes. Snow Joe, LLC will repair any defect in material or workmanship, and repair or replace any defective part, subject to the conditions, limitations, and exclusions set forth herein. Such repair or parts replacement will be free from charge to the original purchaser except noted below.

The duration of the warranty applies only if the product is put to personal use around the household or residence. If the product is put to any business use, commercial or industrial, then the duration of this warranty is 90 days from the date of original purchase. If any product is rented or leased, the duration of the warranty is 90 days from the date of original purchase.

It is the owner's responsibility to perform correctly all maintenance, and minor adjustments explained in the owner's manual.

Electric Products:

To obtain a replacement electric powered unit or repair the existing electric powered unit, you must return the complete unit and postage prepaid to: **Snow Joe Return Center, 86 Executive Avenue, Edison, NJ 08817**.

Gasoline / Battery Products:

Limitations

- Batteries are warranted only for the period of 12 months after the date of purchase on a prorated basis. Rechargeable batteries will be replaced free from charge during the first 90 days. After the initial 90 days, batteries will be replaced at prorated cost to the customer
- Idlers, cables, and electrical components are warranted to the original purchaser for use at household or residence for a period of two years

Exclusions

- Snow Joe brand engines are covered under this warranty. All other engines and engine accessories are covered only by the engine manufacturer's warranty and are not covered by this warranty
- Parts used that are not genuine Snow Joe parts are not covered by this warranty
- Damages resulting from misuse, alteration, improper assembly, improper adjustment, neglect, or accident which requires repair is not covered under this warranty
- Belts, augers, and tines are not covered under warranty – belts, augers, and tines wear out and can be purchased at www.snowjoe.com or by calling 1-866-766-9563

Snow Joe, LLC may from time to time change the design of its products. Nothing contained in this warranty shall be construed as obligating Snow Joe, LLC to incorporate such design changes into previously manufactured products, nor shall such changes be construed as an admission that previous designs were defective.

This warranty is intended to cover product defects only. Snow Joe, LLC is not liable for indirect, incidental, or consequential damages in connection with the use of the Snow Joe Products covered by this warranty. This warranty does not cover any cost or expense incurred by the purchaser in providing substitute equipment or service during reasonable periods of malfunction or non-use of this product, while waiting for completion of repairs under this warranty. Some states do not allow exclusions of incidental or consequential damages, so the above exclusions may not apply in all states. This warranty may gives you specific legal rights in your state.

If you wish to contact Snow Joe, please direct inquiries to the:
Customer Service Department
Snow Joe Center
86 Executive Avenue
Edison, NJ 08817

Customers who have purchased Snow Joe products exported from the United States and Canada should contact their Snow Joe Distributor (Dealer) to obtain information applicable for your country, province, or state. If for any reason, you are not satisfied with the distributor's service, or if you have difficulty obtaining warranty information, contact your Snow Joe seller. If in the event your efforts are unsatisfactory, please write to the Snow Joe Center at the above address.

If you have any questions about your product warranty, please call 1-866-SNOW-JOE or visit us online at www.snowjoe.com.