LEGACY-V40-BU

Features

- Solid birch frame and maple burl veneers
- Wood top not drilled with any openings
- 3 soft-close drawers
- Adjustable height levelers
- Vessel application

Colors / Finishes

- Golden Burl

Nominal Dimension

- 40W x 19D x 31H (inches)

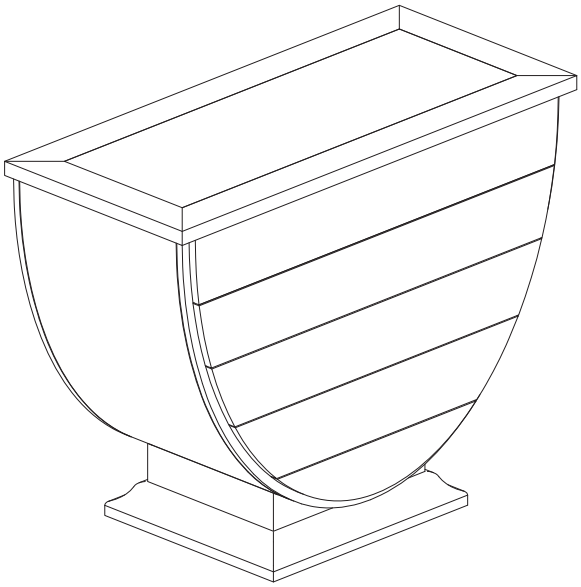

Components

Mirror	LEGACY-M36-BU			
Sink	SVE510BK	SVE510RBK	SVE510GR	SVE470BK
	SVE470GR	SVE470WT		

Product Diagrams

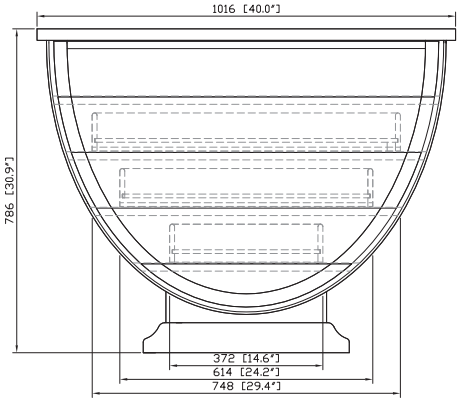

Front

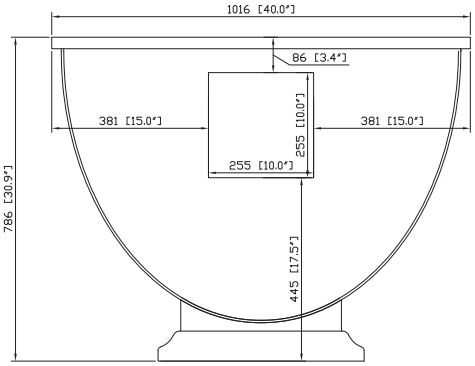

Back

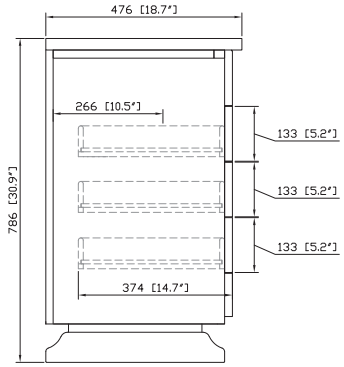

Side

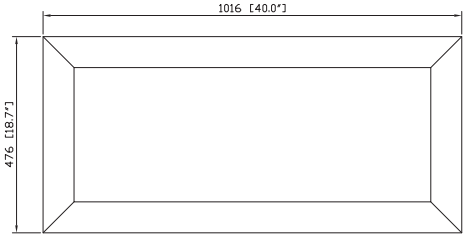

Top