ENJOY

Your QCA Spa

VS300/501/515 PAK (VL260 TOPSIDE)

OWNER'S MANUAL

This owner's manual is for YOU! It will show you how to operate and maintain your very own spa. We think it is important for you to take a few moments and get acquainted with your new spa operation. Please keep this manual available for references.

QCA Spas would like to congratulate you on your purchase and we sincerely hope you enjoy your QCA Spa.

SERIAL NUMBER _____

18 DIGIT SPA NUMBER _____

QCA Spas
"A Step Ahead Since 1966"

Technical Service Toll Free 866-998-0148

TABLE OF CONTENTS

Cleaning the Filter Cartridge *8*

Diagnostic Messages *6*

Draining the Water *7*

Filter Maintenance *8*

Hyperthermia Description *3*

Initial Start Up *5*

Installation Instructions *4*

115/230v Installations *4*

Prevention of Freezing *9*

Refilling your Spa *7*

Removing the Box Filter Cartridge *8*

Spa and Cabinet Maintenance *9*

Spa Location *4*

Spa Top Side Control *5*

Troubleshooting *9*

UL Instructions *3*

Vacation Care *8*

Warranty Information *7-8*

Water Care Program *8-9*

Winterizing *9*

ETL INSTRUCTIONS

The instructions that you are about to read, are required by Underwriters Laboratories to be published in your manual. These instructions are very important for your safety and QCA would like to encourage you to read and apply all instructions. Thank you.

IMPORTANT SAFETY INSTRUCTIONS

When installing and using this electrical equipment, remember to always observe safety precautions, including the following:

1. **READ AND FOLLOW ALL INSTRUCTIONS.**

2. **WARNING-RISK OF CHILD DROWNING**. Extreme caution must be exercised to prevent unauthorized access by children. To avoid accidents, ensure that children cannot use a spa or hot tub unless they are supervised at all times.

3. **DANGER** – To reduce the risk of injury to persons, do not remove suction fittings.

4. A pressure wire connector is provided on the inside and outside of the control box within the unit to permit connection of a minimum No. 8 AWG (8.4mm^2) solid copper bonding conductor between this point and any metal equipment, metal enclosures of electrical equipment, metal water pipe, or conduit within 5 feet (1.5m^2) of the unit as needed to comply with local requirements.

5. (**All permanently installed units must have a GFCI**) This appliance must have a neutrally protected ground-fault circuit-interrupter. Before each use and with the unit operating, push the test button. The unit should stop operating and the reset button should appear. Push the reset button. The unit should now operate normally. If the interrupter does not perform in this manner, a ground current is flowing indicating the possibility of an electric shock. Disconnect the power until the fault has been identified and corrected.

6. Install spa in location that will provide drainage of water away from the spa and away from electrical components.

7. **RISK OF ELECTRIC SHOCK**. Install at least 5 feet (1.5m) from all metal surfaces. (A spa may be installed within 5 feet of metal surfaces if each metal surface is permanently connected by a minimum No. 8 AWG (8.4mm^2) solid copper conductor attached to the wire connector on the terminal box that is provided for this purpose.)

8. **DANGER–RISK OF ELECTRICAL SHOCK**. Do not permit any electrical appliance, such as a light, telephone, radio, or television, within 5 feet (1.5m) of the spa or hot tub.

9. To reduce the risk of injury:
   a. The water in a spa or hot tub should never exceed 104°F (40°C). Water temperatures between 100°F (38°C) and 104°C (40°F) are considered safe for a healthy adult. Lower water temperatures are recommended for extended use (exceeding 10-15 minutes) and for young children.
   b. Since excessive water temperatures have a high potential for causing fetal damage during the early months of pregnancy. Pregnant or possibly pregnant women should limit spa or hot tub water temperatures to 100°F (38°C).
   c. Before entering a spa or hot tub, the user should measure the water temperature with an accurate thermometer since the tolerance of water temperature-regulating devices may vary as much as +/-5°F (3°C).
   d. The use of alcohol, drugs, or medication before or during spa or hot tub use may lead to unconsciousness with the possibility of drowning.
   e. Persons suffering from obesity or with a medical history of heart disease, low or high blood pressure, circulatory system problems or diabetes should consult a physician before using a spa or hot tub.
   f. Persons using medication should consult a physician before using a spa or hot tub since some medications may induce drowsiness while other medications may affect heart rate, blood pressure, and circulation.
   g. The electrical supply for this product must include a suitably rated switch or circuit breaker to open all ungrounded supply conductors to comply with section 422-20 of the National Electrical Code, ANSI/NFPA 70-1987. The disconnecting means must be readily accessible to the tub occupant but installed at least 5 feet (1.5m) from the tub water. For units used in other than single-family dwellings, a clearly labeled emergency switch shall be provided as part of the installation. The switch shall be readily accessible to the occupants and shall be installed at least 5 feet (1.52 m) away, adjacent to, and within sight of the unit.

Just a quick note,

For your own security...Prolonged immersion in water that is warmer than normal body temperature can result in a dangerous condition known as HYPERTHERMIA. The causes, symptoms, and effects of hyperthermia may be described as follows: Hyperthermia occurs when the internal temperature of the body reaches a level several degrees above the normal temperature of 98.6°F. The symptoms of hyperthermia include dizziness, fainting, drowsiness, lethargy, and an increase in the internal temperature of the body. The effects of hyperthermia include (1) unawareness of impending hazard, (2) failure to perceive heat, (3) failure to recognize the need to exit the spa, (4) physical inability to exit the spa, (5) fetal damage in pregnant women, and (6) unconsciousness resulting in a danger of drowning. WARNING - the use of alcohol, drugs, or medication can greatly increase the risk of fatal hyperthermia in hot tubs and spas, and an increase in the internal temperature of the body. The effects of hyperthermia include (1) unawareness of impending hazard, (2) failure to perceive heat, (3) failure to recognize the need to exit the spa, (4) physical inability to exit the spa, (5) fetal damage in pregnant women, and (6 unconsciousness resulting in a danger of drowning. WARNING - the use of alcohol, drugs, or medication can greatly increase the risk of fatal hyperthermia in hot tubs and spas.) Unconsciousness resulting in a danger of drowning. WARNING - the use of alcohol, drugs, or medication can greatly increase the risk of fatal hyperthermia in hot tubs and spas.

SAVE THESE INSTRUCTIONS

Spa Location

The selection of a site for the installation of your spa is a very important decision and should be undertaken keeping several factors in mind.

1. Always check your local codes before installing your spa. A clear understanding of buildings, fences, gates, electrical and plumbing guidelines will be invaluable.
2. Select a location that will compliment your lifestyle and your home. The spa will become an integral part of your life and therefore should be placed advantageously.
3. The position of the spa in relation to surrounding terrain should be considered. Locating the spa near or directly under trees not only cuts off the sun thereby depriving you of natural heat, but also necessitates the physical removal of leaves and debris. Airborne dirt and debris may also be carried into the spa by prevailing winds. In addition, an uncovered spa with wind blowing across the top will tend to lower water temperatures; therefore you may wish to shield your spa from direct winds.
4. You may wish to consider an indoor installation. An indoor spa located off of a bedroom or family room can offer relaxing solitude or enjoyable gatherings of friends or family. Care should be taken in providing protection from possible water damage due to splashing spa should be located on a concrete or ceramic tile floor with a floor drain. High humidity levels relating to the spa can also be a source for damage and should be planned for in the construction stage.
5. Your portable spa with a cabinet has been designed to be self-supporting. Any further reinforcement or support is not required when placed upon a sound foundation. In order to prevent damage to the cabinet and spa be certain to locate the spa on a solid, level foundation capable of maintaining the weight of the spa when filled with water. The center of the spa or footwell must be supported at the same level as the lower perimeter of the cabinet. If the center of the spa is not supported, special precautions must be taken to achieve that support.
6. A base of poured concrete is best for this type of installation. You may wish to use an existing patio but if you wish to construct a new base for your spa, select a level, flat area. After removing the topsoil, construct a square frame using four 2x4's. Usually an area 10x10 foot square will suffice. When the frame has been leveled, pour a 3 1/2" base of concrete mix into the frame leveling the mix by stroking across the top with another 2x4. Finish the top with the cement float. When the slab has cured remove the 2x4's and landscape as desired.
   Note: It is necessary to provide drainage of the compartment for the electrical components.
7. Install your spa in a location, which allows easy access to the equipment bay.
8. Before filling with water, be sure the spa is in its final position and that hoses, tools, etc. are not under the spa.

Installation Instructions

Electrical-General

Prior to performing any service to the spa package turn OFF ALL primary electric power at the main circuit breaker or disconnect panel. Opening the front cover of the electrical control box can make all field electrical connections.

All electrical connections to this spa package must be accomplished by a qualified electrician in accordance with the National Electric Code or the Canadian Electric Code and in accordance with any local electrical codes in effect at the time of installation.

All connections should be made in accordance with the wiring tab enclosed in the electrical control box or the wiring diagrams within this manual.

These spa packages are designed to operate on 60Hz Alternating Current only, at a voltage of 120 or 240 volts as required.

Spa packages with a 120-volt rating require a two wire electrical service, plus ground (line 1, neutral and ground). Spa packages with a 240-volt rating require a three wire electrical service, plus ground (line 1, line 2, neutral and ground). Connections should be made using copper conductors only. The connecting wire and circuit breakers or fuses must all be sized to accommodate the total Ampere load as specified on the equipment module data label.

A bonding lug has been provided on the equipment module to allow connection to local ground points. To reduce the risk of electrical shock, a #8 AWG solid copper bonding wire should be run from this lug to any metal ladders, water pipes or other metal within 5 feet of the spa.

Starting the Spa

1. Fill the spa thru the filter housing before plugging into the electrical circuit. - Be sure all valves (if equipped) are open and all union nuts are tight.
2. Check for plumbing leaks.
3. Be sure all suction valves (if equipped) to the equipment pack are open, with the handles in line with water flow.
4. Set filtering cycles according to control panel instructions.

PLEASE NOTE: To Overseas owners
50 Hz, 230-volt units should be wired to the national code in the country of the owner's residence.

120 volt Installation w/hard-wire

Equipment modules installed for 120 volt operation, require a two-wire electrical service, plus ground (line 1, black), (neutral, white) and (ground, green). Refer to terminal block diagram. Assure that all the procedures on the conversion pages have been followed.

240 volt Installation

Units to be operated at 240 volts must have all electrical connections accomplished by a qualified electrician in accordance with the National Electric Code, the Canadian Electric Code or other local electrical codes in effect at the time of installation. Equipment modules installed for 240 volt operation require a three wire electrical service, plus ground (line 1, line 2, neutral and ground). Refer to terminal block diagram.
Assure that all the procedures on the conversion pages have been followed.

CUSTOMER WARNING:
The National Electric code requires a Ground Fault Circuit Interrupter on all spas; the #160A kit GFCI is available through your QCA Spa Dealer. Alert your electrician that if another GFCI is used it must have Neutral Protection.

YOUR • QCA • SPA • EQUIPMENT

VL260 Series Control

VS300/501/515 =Jets2 / Jets1 / Temp / Light

Initial Start Up

When your spa is first actuated, it will go into Priming mode, indicated by "*Pr*." The Priming mode will last for less than 5 minutes (press "Temp" to skip Priming Mode) and then the spa will begin to heat the spa and maintain the water temperature in the Standard mode.

Temperature Control

The start-up temperature is set at 100F°/37°C. The last measured temperature is constantly displayed on the LCD. Note that the last measured spa temperature displayed is current only when the pump has been running for at least 2 minutes. To display the set temperature, press the Temp" pad once. To change the set temperature, press the pad a second time before the LCD stops flashing. Each press of the "Temp" pad will continue to either raise or lower the set temperature. If the opposite direction is desired, release the pad and let the display revert to the current water temperature. Press the pad to display the set temperature, and again to make the temperature change in the desired direction. After three seconds, the LCD will stop flashing and display the current spa temperature.

Jets – Pump 1

Touch the "Jets" button once to activate the low speed of the pump and again for the high speed. Press the "Jets" button again to turn off the pump. If left running, the pump's low speed will automatically turn off after four hours, and the pump's high speed will automatically turn off after 15 minutes. The low speed of the pump runs when the blower is on. It may also activate for at least two minutes every 30 minutes to detect the spa temperature and then to heat to the set temperature if needed. When the low speed turns on automatically, it cannot be deactivated from the panel; however, the high speed may be started.

Aux – Pump 2

If your system has a pump 2 installed. Press "Aux" once pump will come on high speed. Press "Aux" twice, pump 2 shuts off. If your system has a blower installed. Press "Aux" once the blower will come on. Press "Aux" twice, the blower shuts off. If left on, either will shut off automatically after 15 minutes. If equipped with only one pump, this button is inactive.

Aux – Pump 2 and Blower

If your system has a pump 2 and a blower installed, press "Aux" to switch pump 2 to high speed. Press "Aux" twice to turn on the blower. Pressing "Aux" a third time will shut off pump 2, but the blower will remain on. Press Aux a fourth time to shut off the blower.

Light

Press the "Light" button to turn the light on and off. If left on, the light automatically turns off after 4 hours.

Standard Mode is programmed to maintain the desired temperature. Note that the last measured spa temperature displayed is current only when the pump has been running for at least 2 minutes

Preset Filter Cycles

The first filter cycle begins six minutes after the spa is energized. The second filter cycle begins 12 hours later. Filter duration is programmable at the Master Control Pad for 2, 4, 6, 8 hours or for continuous filtration, (indicated by "FC"). The default filter time is two hours. To program, press "Temp", then "Jets." Press "Temp" to adjust. Press "Jets" to exit programming.

Freeze Protection

If the temperature sensors detect a drop to below 44°F/6.7°C within the heater, IC will be displayed and the pump will automatically activate to provide freeze protection. The equipment stays on until 4 minutes after the sensors detect that the spa temperature has risen to 45°F/7.2°C or higher.

WARNING

This equipment generates and uses radio frequency energy and if not installed and used properly, that is, in strict accordance with the manufacturer's instruction, may cause interference to radio and television reception. It has been type tested and found to comply with the limits for a class B computing device in accordance with the specification in subpart J of part 15 of the FCC rules, which are designed to provide reasonable protection against such interference in a residential installation. However, there is no guarantee that interference will not occur in a particular installation. If this equipment does cause interference, which can be determined by turning the equipment on and off, the user is encouraged to try to correct the interference by one or more of the following measurers: Reorient the receiving antenna. Relocate the receiver with respect to the spa. Move the receiver away from the spa. Plug the receiver into a different outlet so that the receiver and spa are on different circuits. If necessary, the user may find the following booklet prepared by the Federal Communications Commission helpful: "How to identify and resolve radio-TV interference problems." This booklet is available from the U.S. Government Printing Office, Washington, DC 20402, Stock No. 004-00000345-4.

Diagnostic Messages

Message	Meaning	Action Required
	No message on display. Power has been cut off to the Spa.	The control panel will be disabled until power returns. Spa settings will be preserved until next power up.
PR	System is priming. (Spa must be filled to proper level. Water should be at least halfway up the skimmer.)	Spa is powering up. This operation takes 6 minutes total. After 4 minutes,"- -" will appear for two minutes. The spa then enters its first filter cycle and is not available for setting.
--	Temperature unknown.	After the pump has been running for 2 minutes, the temperature will be displayed.
HH	"Overheat" - The spa has shut down. One of the sensors has detected 118°F/48°C at the heater.	DO NOT ENTER THE WATER. Remove the spa cover and allow the water to cool. Once the heater has cooled, reset by pushing any button. If the spa does not reset, shut off the power to the spa and call your dealer or service organization.
OH	"Overheat" The spa has shut down. One of the sensors has detected that the spa water is 110°F/43°C.	DO NOT ENTER THE WATER. Remove spa cover and allow water to cool. At 107°F/42°C, the spa should automatically reset. If the spa does not reset, shut off power to the spa and call your dealer or service organization.
IC	"Ice" Potential freeze condition detected	No action required. The pump will automatically activate regardless of spa status.
SA	Spa is shut down. The sensor that is plugged into the Sensor "A" jack is not working.	If the problem persists, contact your dealer or service organization. (May appear temporarily in an overheat situation and disappear when the heater cools)
Sb	Spa is shut down. The sensor that is plugged into the Sensor "B" jack is not working.	If the problem persists, contact your dealer or service organization. (May appear temporarily in an overheat situation and disappear when the heater cools)
Sn	Sensors are out of balance. If changing spa temperature it may just be temporary. If flashing by itself, the spa is shut down.	If the problem persists, contact your dealer or service organization
HL	A significant difference between temperature sensors has been detected. This could indicate a flow problem.	Check the water level in spa. Refill if necessary. If the water level is okay, make sure the pumps have been primed. If problem persists, contact your dealer or service organization.
LF	Persistent low flow problems. (Displays on the fifth occurrence of the "HL" message within 24 hours.) Heater is shut down, but other spa functions continue to run normally.	Follow the action required for "HL" message. Heating capability of the spa will not reset automatically, you may press any button to reset.
dr	Possible inadequate water, poor flow, or air bubbles detected in heater. Spa is shut down for 15 minutes.	Check water level in spa. Refill if necessary. If the water level is okay, make sure the pumps have been primed. Press any button to reset, or this message will automatically reset within 15 minutes. If the problem persists, contact your dealer or service organization.
dY	Inadequate water detected in heater. (Displays on the third occurrence of "dr" message). Spa is shut down.	Follow action required for "dr" message. Spa will not automatically reset. Press any button to reset.

WARNING! SHOCK HAZARD! NO USER SERVICABLE PARTS.
Do not attempt service of this control system. Contact your dealer or service organization for assistance. Follow all owner's manual power connection instructions. Installation must be performed by a licensed electrician and all grounding connections must be properly installed.

QCA Spa Light
All equipment Modules have a receptacle, located on the Equipment Module. This receptacle is provided for the connection of the spa light.

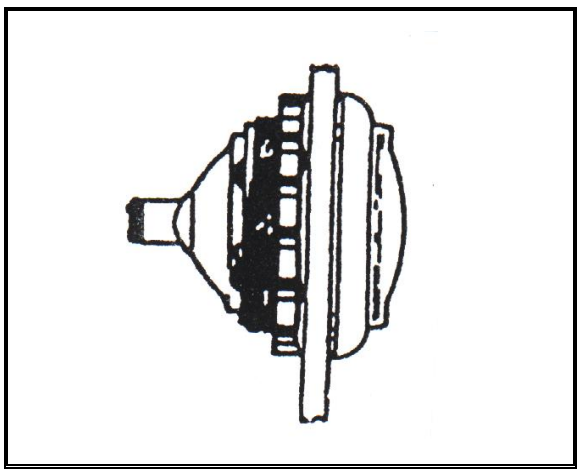

Your QCA Spa has a standard 12v light. The spa light may be turned ON or OFF by pressing the LIGHT button, located on the spa side control. The light will automatically turn off after 4 hours.

Spa Light Lens Installation
Colored lenses (Optional) are included with the spa light. To install or remove lenses simply push ON or pull OFF of the spa light, as shown below.

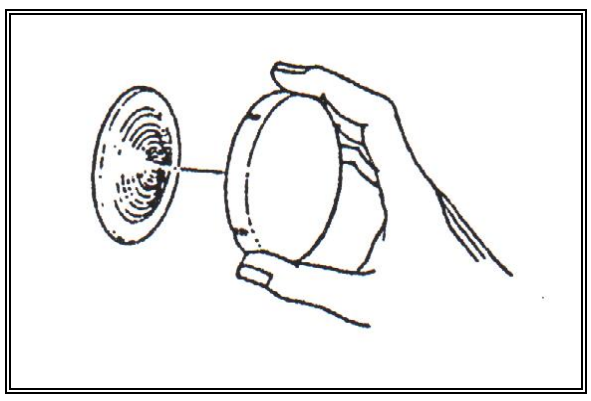

Spa Light Bulb Replacement
To replace the spa light bulb; turn ALL power to the Equipment Module OFF. Locate the rear of the spa light and remove the bulb socket by rotating socket counter clockwise 1/8 turn and pulling on the socket (not the wires), as shown below. Pull the bulb from the socket and replace by reversing the above steps.

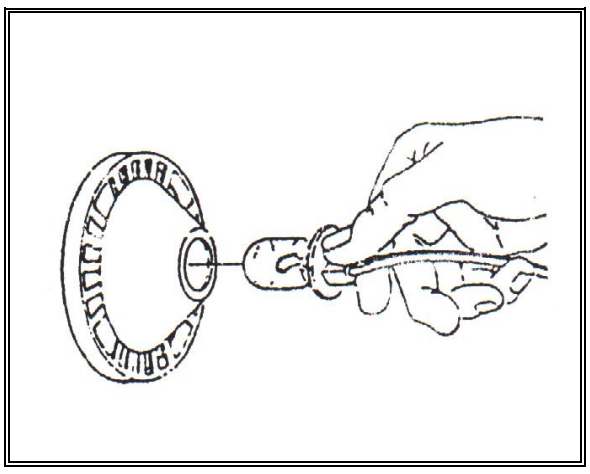

CAUTION: *The replacement bulb must be the same rating as the factory installed bulb.*

Spa Care and Maintenance
It is recommended to completely drain the spa at least four times a year. Otherwise, the water becomes chemically "saturated" and no longer responds to regular chemical upkeep. The spa should also be drained before long periods of disuse, or for equipment repair.

Draining of Water
Because of the small water volumes involved with spas, sometimes it is much simpler and less expensive to drain the water than to adjust the water chemistry with chemical additives. To drain the spa, shut off the main breaker to your spa equipment pack. A drain fitting (if equipped) is provided. It will be located inside the spa cabinet on the left side. Attach garden hose to the adapter, then pull adapter to release the water flow.

Optional Draining of the Water

- Simply siphon water from spa with garden hose
- A sump pump may be used to pump water from spa.
- Use a wet/dry vacuum to remove the remaining amount of water.

Refilling your Spa

1. Be sure the main breaker to your spa equipment pack is off.
2. Fill spa thru the filter housing with water to proper level.
3. Turn power back on, spa will automatically start to run and heat water to set temperature.

Your Water Care Program

Before adding chemicals to your spa, do a full water analysis with a test kit or ask your QCA Spa dealer to conduct the water test for you. (The following is an illustration of the steps taken when Bromine is the water care program. You may choose to use an alternate water care program with different chemicals. Please consult your QCA Spa dealer for proper water care instructions.)

Step 1: Always have the circulation system running before adding any chemicals. As you fill your spa to the level recommended by the manufacturer, add cleaning agent to prevent mineral staining and to protect equipment against scale and corrosion. Circulate for one hour.

Step 2: "Balance" the water so that it is neither alkaline (scale forming) nor acidic (corrosive). Balanced spa water should be 7.2- 7.8 on the pH scale, with total 7.3 alkalinity (the measure of the ability of water to resist a change in pH) in the range of 80-120 parts per million (PPM).

A. If pH is lower than 7.2, add pH UP
B. If pH is higher than 7.8, add pH DOWN
C. If total alkalinity is below 80, add ALKALINITY UP.

Step 3: Shock treat the water with non chlorine shock to destroy any organic contaminants that may have accumulated in the spa during filling.

Step 4: Prepare your disinfectant dispenser or feeder for use according to directions. A bromine residual of 2.0 - 4.0 PPM, as determined by your test kit, should be maintained at all times. Directions for using the bromine are indicated on the float ring.

We suggest you follow a regular maintenance program to keep your spa water fresh and crystal clear.

Water Care

Daily Checklist

1. Test for proper bromine or chlorine level. Proper bromine level should be maintained at 2.0 - 4.0 PPM.
2. Test pH levels and adjust if needed. If you are having difficulty keeping pH properly balanced, it may be an indication that total alkalinity needs adjusting. Have your dealer test the water and adjust if needed.

Weekly Checklist

1. Add Clarifier to help the filter remove small particles and to retain water clarity.

2. Add Chelating Agent to protect your equipment against stains, scale and rust.

3. For spas located outdoors or subject to a great deal of sunlight add Algaecide to guard against algae.

4. Shock your spa weekly with Oxidizer to remove contaminants such as ammonia, body oils and foreign matter. Unless spa water is routinely shock treated, contaminants will accumulate to cause eye and skin irritation, odors and cloudy dull water appearance.

5. To eliminate and prevent foaming, add a small amount of NON FOAM agent as needed.

General Guidelines

• NEVER **MIX CHEMICALS TOGETHER**

• Add only small amounts of each chemical at a time until the desired level is achieved. Do not exceed dosage rates on label directions.

• Keep spa free of debris and cover spa when not in use.

• Circulate the water for 2-4 hours each day to maintain proper filtration. Clean your filter with FILTER CLEANER every 1-2 months.

• Remove oils and grease around water line with a cleaner on a weekly basis.

• In heavily used spas, water should be drained and refilled every two months or whenever it becomes difficult to maintain proper chemical levels.

Filter Maintenance

As with any water filtering system, the filter cartridges may become clogged with particles or with calcification that will result in reduced water flow. In your QCA Spa, it is important to maintain a clean, unobstructed filtering system. This not only provides the maximum performance from the hydrotherapy jets, but allows the 24 hour filtration system to function effectively. We recommend the filter cartridges be cleaned (either spraying clean with water or soaking to dissolve minerals) EVERY MONTH.

WARNING: : Failure to maintain the cartridges in a clean, unobstructed manner will result in reduced water flow through the heater assembly which may cause the pump to stop operating generating error codes "OH" "DR" "DY" "HH". If this occurs during sub-freezing temperatures and goes unnoticed, the spa water may freeze. Any damage to the spa (from freezing) which is a direct cause of poor maintenance will not be covered by warranty.

Removing a Filter Cartridge

The cartridge of the in-line filter must be removed for cleaning. This is accomplished as follows:

1. Remove floating telescope lid.
2. Twist and lift out basket to reveal the cartridge.
3. Remove the filter cartridge from the housing and clean, or replace it with a new cartridge.

NOTE: Not maintaining your water can result in damage of your spa jets, filter, etc. This damage, due to incorrect water maintenance is not covered under warranty.

Cleaning the Filter Cartridge

1. Hold the cartridge in an upright position and spray downward into the pleats of the fabric with a garden hose to flush away debris. Cleaning will be easier if the garden hose nozzle can be adjusted to a single jet spray.
2. After hosing off the cartridge, it is highly recommended that the cartridge be allowed to soak in a filter-cleaning solution available through your local dealer. Soak the cartridge for 24 hours to remove body oils and body lotions that become impregnated in the cartridge fabric during filtration. Rinse the cartridge thoroughly before placing it back in the filter housing.

NOTE: We recommend after cleaning to allow the filter to dry before replacing. We suggest having an extra filter on hand.

3. If the cartridge is coated with algae or bacteria or a hard, solid material, (which it may indicate a calcium build-up) on the fabric. This build-up can be removed by soaking the cartridge. A cartridge cleaning solution is available through your QCA dealer. When using this solution, follow instructions provided on label.
4. Clean the filter housing.
5. Return the filter cartridge to the housing and replace basket and floating telescope lid.

Vacation Care Instructions

If you plan to be away, follow these instructions to maintain the water quality:

Short Time Periods (3-5 Days):

1. Adjust the pH by following the instructions outlined in the water quality and maintenance section.

2. Sanitize the water by following the "super-chlorinating" procedures and lock your thermal cover in place using the tie-downs.

3. Upon your return, sanitize the water (superchlorinate, if necessary) and balance the pH.

IMPORTANT NOTE: *Spa water oxidizers such as dichlor chlorine maintain their level of effectiveness substantially longer in cool water than in hot water.*

Long Time Periods (4-15 Days)
Prior to leaving:

1. Adjust the pH as required.

2. Sanitize the water by following the SUPER-CHLORINATION procedures.

3. Upon your return, check the level of sanitation of your spa water. If the chlorine test reads "O" and you have been gone an extended period of time, SUPERCHLORINATE the spa water to ensure all organisms and algae are oxidized. The spa water will be safe for you to use once the Free Chlorine Residual is below 5.0PPM.

Prevention of Freezing

The QCA Spa has been designed and engineered for year-round use in any climate. The energy efficiency of the spa may decrease during these cold periods, as the heater will cycle more frequently. If a freeze condition is detected, the low-speed pump will automatically activate. This is a normal spa function; no corrective action is necessary. Freeze protection is enabled regardless of the spa's status.

Winterizing

In very cold weather you may not want to venture outside to use your spa. In this case, you may move it to a heated area, or leave it as is until the weather warms. If you do leave the spa unused for a long period of time in severely cold weather, you should winterize the spa to avoid accidental freezing due to a power or equipment failure. Follow these easy steps: Turn power to the spa OFF. Drain the spa. Use a wet vacuum to suck or blow out the air injectors, water jets and water suction fittings. Add 1-3 gallons of RV antifreeze, depending on the size of the spa, to all the air injectors, water jets, suction drains, and filter. **Caution: Any lines not receiving adequate antifreeze are subject to freeze damage!**

Acrylic Finish - The acrylic finish on all QCA spas is impervious to most of the problems associated with non-acrylic finished spas and requires very little effort to keep it looking bright, shiny and clean. Every one or two months the spa should be drained, cleaned, polished and refilled. For the cleaning, use any non-abrasive cleaner. There are several non-abrasive products on the market that can be used for polishing. Made specifically for acrylic spas are cleaner/polish/sealer combinations, which contain reactive silicones instead of wax. If these are not available, any high quality silicone automotive polish will suffice.

Thermo Guard Cabinet Care – Handcrafted maintenance free cabinet surfaces may need to be wiped down from time to time with a soap and water solution or simply sprayed with a garden hose. Use of harsh chemicals to clean the surface will cause the cabinet to discolor.

Troubleshooting

***Please Note**: The following corrective actions may be performed by the spa owner. If the trouble cannot be corrected in the steps below, please refer to your QCA Spas, Inc. Dealer for service. (Improper servicing by an unauthorized serviceman or spa owner could result in damage that will not be covered by the warranty, or could cause serious injury.)Diagnostic messages-If failure occurs check control pad read out for diagnostic message.*

SYMPTONS	CORRECTIVE ACTION
Equipment does not operate	Check to see if the power cord is plugged in. Test the GFCI to see if it has “tripped”. IMPORTANT: If the GFCI trips repeatedly, do not use the spa, and contact your dealer. Check the circuit breaker in the main circuit panel.
Pump does not work (in low speed)	Check that the water valves are completely open. Inspect the filter cartridge for dirt and debris. Clean or replace. Check for blockages or restrictions at the main drain and catch basket. Check for blockages or restrictions at jets. Check fill level or water level.
Pump does not work (in high speed)	Push the button for high speed jet. Check the above items if “Pump does not work”
Inadequate jet action	The filter cartridge may be clogged. Pull the cartridge from the filter canister. If the jet action improves, clean or replace the filter. Check the spa water level. Water must be above minimum water level. Check that the water valves are completely open. Check jet orifice for blockage. Clear if blocked.
No heat	Check all steps in "Equipment does not operate." Push any button to reset. Check that the temperature dial is set for the desired temperature. Remember: Do not expect hot water immediately from the jets. The heater will raise temperature 2-6 degrees per hour if covered with Soft Top™. (Soft Top is a foam cover that is not affected by chemicals normally found in spas. It is a closed cell foam which resists water absorption and helps to create a moisture barrier.) Inspect the filter cartridge for dirt and debris. Check if pump is operating. Follow the step in the “Pump does not work.”
Underwater spa light does not work	Tighten the light bulb in the socket, located in the equipment bay. Replace the 12-volt light bulb.
Water is cloudy	Check the water chemistry balance and replenish as needed. Clean or replace the filter cartridge.

WARRANTY REGISTRATION

This warranty applies to spas manufactured by QCA Spas and sold to an original consumer purchaser at retail ("Purchaser") after January 1, 2008. To validate this warranty, the Purchaser must complete the enclosed warranty registration card and mail it to QCA Spas within 30 days of deliver of the spa. RETURN OF THE OWNER REGISTRATION CARD IS A CONDITION OF WARRANTY COVERAGE. This warranty is exclusive and supersedes all other representations or obligations of QCA Spas, whether express or implied and whether oral, written or printed.

Your Serial Number is located inside shell on the step or under shell hanging from plumbing within the equipment compartment of your QCA Spa.

Date Purchased:

Date Installed:

Spa Model:

Serial Number:

Warning: Elderly persons, infants and anyone subject to heart disease, diabetes, high or low blood pressure, strokes, epilepsy or similar afflictions should not enter a spa alone and without consulting a physician. Unsupervised use by children should be prohibited. Never use a spa while under the influence of alcohol, anti-coagulants, antihistamines, vasoconstrictors, vasodilators, stimulants, hypnotics, narcotics, or tranquilizers. If you are taking medications of any kind, or being treated for any illness, consult your physician prior to the use of the spa. A spa should be kept at temperatures less then 104° for personal safety and health.

To validate your warranty the enclosed warranty must be filled out and returned to QCA Spas, Inc., 1021 State St, Bettendorf, Iowa 52722 within 30 days from date of purchase.

For your warranty see enclosed packet located inside your spa shell.