dacor®
The Life of the Kitchen.®

Use and Care Manual
Distinctive Range

For use with models DR30D and DR30D-C

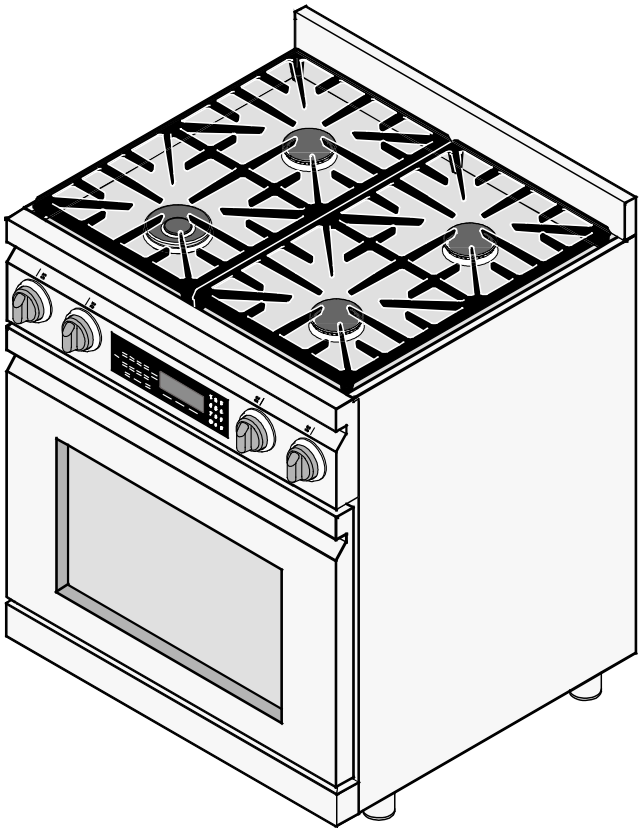

Table of Contents

Important Safety Instructions 1-3
Getting to Know Your Range 4-6
Setting Up Your Range 7
Operating the Cooktop 8-9
Operating the Oven 10-21
Cooking Tips 22
Care and Cleaning 23-28
Replacement Parts and Accessories 29
Before You Call For Service 30-31
Warranty and Service 32
Warranty Card ..... Back Cover

American Made★Family Owned

Part No. 106768 Rev. B

dacor®
The Life of the Kitchen.®

To Our Valued Customer:

Congratulations on your purchase of the very latest in Dacor® products! Our unique combination of features, style and performance make us The Life of the Kitchen™, and a great addition to your home.

In order to familiarize yourself with the controls, functions, and full potential of your new Distinctive Appliance, we suggest that you thoroughly read this use and care manual, beginning with the ***Important Safety Instructions*** section.

All Dacor appliances are designed and manufactured with quality and pride, while working within the framework of our company value. Should you ever experience a problem with your product, please first check the ***Before You Call for Service*** section of this manual for guidance. It provides useful suggestions and remedies prior to calling for service.

Valuable customer input helps us to continuously improve our products and services, so please feel free to contact our Customer Service Team for assistance with any of your product support needs.

Dacor Customer Service Team
600 Anton Blvd. Suite 1000
Costa Mesa, CA 92626

Telephone: (800) 793-0093
Fax: (626) 403-3130
Hours of Operation: Monday through Friday
6:00 A.M. to 5:00 P.M. Pacific Time
Web Site: www.Dacor.com

Thank you for choosing Dacor for your home. We are a company built by families for families and we are dedicated to serving yours. We are confident that your new Dacor product will deliver a high level of performance and enjoyment for many years to come.

Sincerely,

The Dacor Customer Service Team

© 2010 Dacor, all rights reserved

Important Safety Instructions

Installer: Leave these instructions with the appliance.

Consumer: Read this use and care manual completely before using this appliance. Save it for future reference. It contains important use and care information. Keep your sales receipt or canceled check. Proof of original purchase date is required for warranty service.

For service and warranty information, see page 32.

If you have any questions (other than warranty questions) call:

Dacor Customer Service

Phone: (800) 793-0093 (U.S.A. and Canada)
Monday — Friday 6:00 A.M. to 5:00 P.M. Pacific Time

Web site: www.Dacor.com

Have the complete model and serial number for your range ready. The product model and serial number label can be seen through the grill below the control panel, on the right side. Write these numbers below for easy access.

Product model and serial number label, located inside unit, behind grill

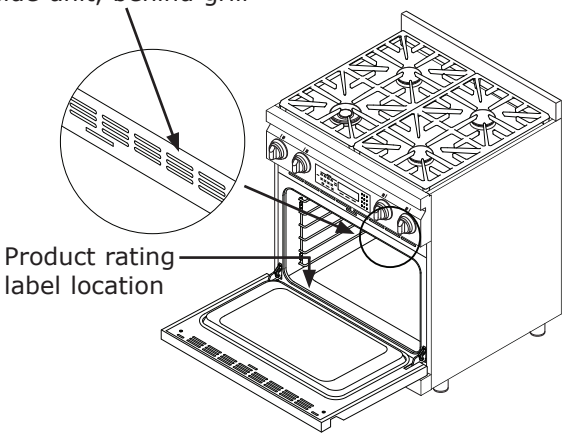

Model number _____

Serial number _____

Date of purchase_____

At Dacor, we continuously improve the quality and performance of all our products. As a result, we may need to make changes to this appliance without updating these instructions.

Visit www.Dacor.com to download the latest version of this manual.

CALIFORNIA PROPOSITION 65 WARNING

The burning of gas cooking fuel generates some by-products that are on the list of substances which are known by the State of California to cause cancer or reproductive harm. California law requires businesses to warn customers of potential exposure to such substances. To minimize exposure to these substances, always operate this unit according to the use and care manual, ensuring you provide good ventilation when cooking with gas.

About Safety Instructions

The ***Important Safety Instructions*** and warnings in this manual are not meant to cover all possible problems and situations that can occur. Use common sense and caution when installing, maintaining or operating this or any other appliance.

Always contact the Dacor Customer Service Team about problems or situations that you do not understand.

Safety Symbols and Labels

⚠ DANGER

Immediate hazards that **WILL** result in severe personal injury or death.

⚠ WARNING

Hazards or unsafe practices that **COULD** result in severe personal injury or death.

⚠ CAUTION

Hazards or unsafe practices that **COULD** result in minor personal injury or property damage.

⚠ WARNING

WARNING - NEVER use this appliance as a space heater to heat or warm the room. Doing so may result in carbon monoxide poisoning and overheating of the appliance.

⚠ WARNING

WARNING - NEVER cover any slots, holes or passages anywhere on the range or cover an entire oven rack with materials such as aluminum foil. Doing so blocks air flow through the range and may cause carbon monoxide poisoning. Aluminum foil linings may also trap heat, causing a fire hazard.

READ AND SAVE THESE INSTRUCTIONS

Important Safety Instructions

General Safety Precautions

To reduce the risk of fire, electric shock, serious injury or death when using your range, follow basic safety precautions, including the following:

⚠ DANGER

IMPORTANT: If you smell gas:

- Do not use or light any appliance.
- Do not touch any electrical switch or use any electrical devices including the telephone in your building.
- From a neighbors phone, immediately call the gas supplier. Follow the gas supplier's instructions.
- If you cannot contact the gas supplier, call the fire department.

IMPORTANT: To avoid the possibility of explosion or fire, do not store or use combustible, flammable or explosive vapors and liquids (such as gasoline) inside or in the vicinity of this or any other appliance. Also keep items that could explode, such as aerosol cans away from the burners and the oven. Do not store flammable or explosive materials in adjacent cabinets or areas.

⚠ WARNING

- If you receive a damaged product, immediately contact your dealer or builder. Do not install or use a damaged appliance.
- Make sure that the range has been properly installed and grounded by a qualified installer according to the accompanying installation instructions. Have the installer show you the location of the gas shut off valve and the circuit breaker panel or fuse box so that you know where and how to turn off the gas supply and power to the range.
- To prevent the unit from tipping forward and to provide a stable installation, the unit must be secured in place with the anti-tip device (see the installation instructions provided with this range).
- Do not install, repair, or replace any part of the range unless specifically recommended in the literature accompanying it. A qualified service technician should perform all other service.
- Before performing any type of service, make sure that the gas supply and electrical power to the range is turned off.
- Only use the range for cooking tasks expected of a home appliance as outlined in this manual. This range is not intended for commercial use.
- Never allow anyone, including children to sit, stand or climb on any part of the range, including the door. Doing so may cause tipping, damage, serious injury or death.
- Do not attempt to use this appliance in the event of a power failure.
- Do not tamper with the controls.

⚠ WARNING

- Do not operate the cooktop without the knobs and trim rings in place.
- To avoid the possibility of fire, do not leave the range unattended when using the cooktop.
- NEVER block or cover any vents, slots or passages anywhere inside the oven or on the outside of the range. Doing so blocks airflow through the oven and cooktop and may cause carbon monoxide poisoning or fire. See the ***Getting to Know Your Range*** section for the location of the various air vents (slots).
- Do not cover the burners and grates with anything except properly selected utensils. Decorative covers may cause a fire hazard or damage to the range if a burner is accidentally turned on with the cover in place.
- Turn the knobs to the "**OFF**" position prior to removing them from the valve stems.
- Keep flammable items, such as paper, cardboard, plastic and cloth away from the burners and other hot surfaces. Do not place such items in the oven. Do not allow pot holders to touch hot surfaces or gas burners.
- Do not use the oven for storage.
- Do not wear loose or hanging apparel while using the range. Do not allow clothing to come into contact with the interior of the oven or the cooktop and surrounding areas during and immediately after use.
- Do not use towels or bulky cloth as pot holders.
- Do not hang flammable or heat sensitive objects over the range. If the range is near a window, do not use long curtains as window treatment. The curtains could blow over the cooktop and create a fire hazard.
- When deep fat frying:
  - Be certain that the pan is large enough to contain the desired volume of food without overflow caused by the bubbling of the fat. Never leave a deep fat fryer unattended.
  - Avoid frying moist or frost-covered foods. Foods with high water content may cause spattering or spilling of the hot fat.
  - Heat fat slowly, and stir together any combination of oils and fats prior to applying heat. Utilize a deep fat frying thermometer to avoid heating the fat to temperatures above the flash point.
- DO NOT TOUCH THE SURFACES OF THE OVEN OR COOKTOP DURING OR IMMEDIATELY AFTER USE.
- Do not store items of interest to children on top of or above the range. Children could be burned or injured while climbing on the appliance.

Important Safety Instructions

⚠ WARNING

- Use cookware only for its intended purpose. Check the manufacturer's recommendations before use to determine if a utensil is suitable for use on a cooktop or in an oven. Certain types of glass, ceramic and earthenware are not suitable for use on a cooktop. Personal injury or damage may result from the improper use of cookware.
- Select cookware carefully. Use utensils of the proper size, material and construction for the particular type of cooking being done. Utensils need to be large enough to contain the desired quantity of food without boil-overs or spill-overs. Choose pans with easy to hold handles that will stay cool while cooking. Do not use utensils with loose handles. Avoid using pans that are too heavy to lift safely.
- Before using glazed cookware, such as glass, ceramic or earthenware, check the manufacturer's temperature and usage recommendations.
- Glazed cookware that is not designed for high heat use may crack or break, causing a spill or burn hazard.
- Exercise caution when opening the oven door. Let hot air or steam escape before looking or reaching into the oven.
- Use extreme caution if adding water to food on a hot cooktop or in the oven. The steam can cause serious burns or scalds.
- Use only dry pot holders when removing food and cookware from the cooktop or oven. Wet pot holders can cause steam burns.
- Make sure that all the cooktop parts are dry before lighting a burner.
- Do not heat eggs or unopened food containers such as baby food jars and cans. Pressure build up may cause them to burst and cause injury.
- For your safety, do not use the oven to cook without the convection filter installed. When the filter is not installed, the spinning fan blades at the back of the oven are exposed.
- Do not leave children alone or unattended in the area around the range. Do not allow children to play with the controls, pull on the handle or touch other parts of the range.
- Make sure individuals who use the range are able to operate it properly.
- Clean the range thoroughly before operating it for the first time.
- Clean and maintain the range regularly as instructed in this manual. Keep the entire range, ventilation filters and range hoods free of grease that could catch fire.
- Do not allow food to sit in the oven for more than one hour before or after cooking. Eating spoiled food can result in food poisoning.

⚠ WARNING

- Non-stick coatings, when heated, can be harmful to birds. Remove birds to a separate, well-ventilated room during cooking.

TO REDUCE THE RISK OF INJURY TO PERSONS IN THE EVENT OF A RANGE TOP GREASE FIRE:

a. SMOTHER FLAMES with a close-fitting lid, cookie sheet or metal tray, then turn off the burner. BE CAREFUL TO PREVENT BURNS. If the flames do not go out immediately, EVACUATE AND CALL THE FIRE DEPARTMENT.

b. NEVER PICK UP A FLAMING PAN - you may be burned.

c. DO NOT USE WATER, including wet dish cloths or towels - a violent steam explosion may result.

d. Use a fire extinguisher ONLY if:
   - You have a Class ABC extinguisher, and you already know how to operate it.
   - The fire is small and contained in the area where it started.
   - The fire department is being called.
   - You can fight the fire with your back to an exit.

⚠ CAUTION

- Do not allow acids (citrus juices, tomato sauces, etc.) to remain on the range's surfaces. The finishes may stain.
- Never use the cooktop surface as a cutting board.
- Do not try to remove heavy spills with a sharp object such as a knife or metal spatula. Sharp objects may scratch the range's surfaces.
- Do not line the oven with aluminum foil or other materials. These items can melt or burn up during self cleaning and cause permanent damage to the oven.
- Do not leave oven racks, the convection filter, the meat probe or any other items in the oven during self cleaning. Damage to the items or the oven itself will occur.
- Do not leave objects, such as aluminum foil, the meat probe, cookie sheets, etc. on the bottom of the oven. Objects left on the bottom of the oven may cause damage.
- Do not allow the the broil element on the oven ceiling to become covered up by cookie sheets, aluminum foil, pots, pans, etc. Covering them could cause the heating elements to over-heat, damaging the oven.
- Do not expose the knobs or trim rings to direct flame, hot utensils or other sources of heat.
- Always ensure that the light fixture lens cover is in place when using the oven. The lens cover protects the light bulb from breakage caused by high oven temperatures or mechanical shock.

Parts of the Oven

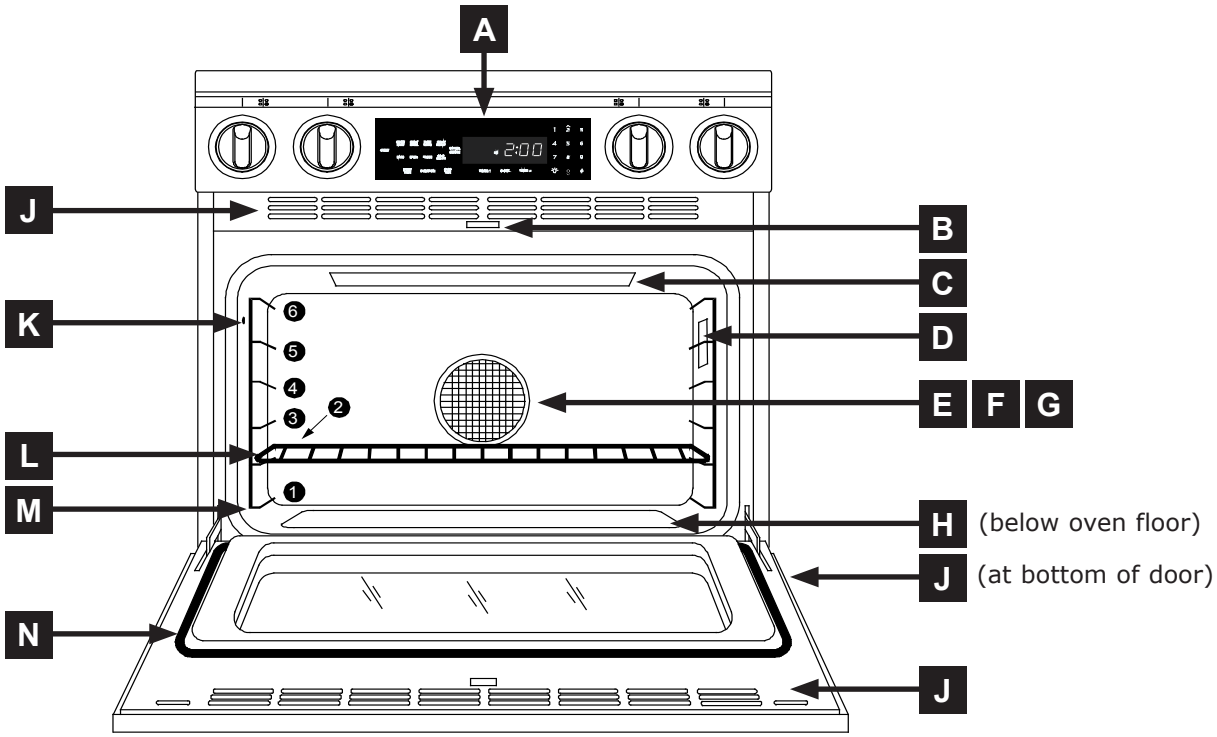

A	**Control panel**	The control panel consists of keys and a display. Use the control panel to control all the oven's features (sometimes called modes).
B	**Self clean latch**	The self clean latch automatically locks the oven door during the self clean cycle. The door latches for your safety. There are very high temperatures inside the oven during the self clean cycle.
C	**Broil element**	The broil element is located on the ceiling of the oven chamber. It is the source of top heat.
D	**Oven light**	There is a light inside the oven chamber so that you can easily see the food inside. Press the light key on the control panel to turn it on. The bulb is 12 volt, 20 Watt, halogen.
E	**Convection filter**	The convection filter covers the convection fan. It helps prevent the transfer of taste from one food to another when you are cooking a whole meal. It also keeps the oven cleaner and covers the moving fan blades for safety purposes.
F	**Convection element**	The convection element heats the air that is blown into the oven chamber by the convection fan during the convection cooking process. The convection filter covers it.
G	**Convection fan**	The convection fan blows heated air into the oven chamber during the convection cooking process. The convection filter covers it.
H	**Bake element**	Hidden below the floor of the oven chamber is the bake element. It is the source of bottom heat.
J	**Air intake/Exhaust slots**	The range draws air in through the intake slots to cool its internal parts. The air comes out through the exhaust slot at the bottom of the oven. Do not block or cover the air intake or exhaust slots.
K	**Meat probe connector**	When you use the meat probe, insert the skewer into the meat and plug the other end into this connector. See the ***Using the Meat Probe*** section on page 18 for proper operation.
L	**Oven rack**	Your oven comes with a set of three racks.
M	**Rack supports**	There are six sets of rack supports inside the oven chamber. They support the adjustable oven racks.
N	**Door gasket**	The door gasket prevents heat from escaping when the door is closed.

Control Panel Layout

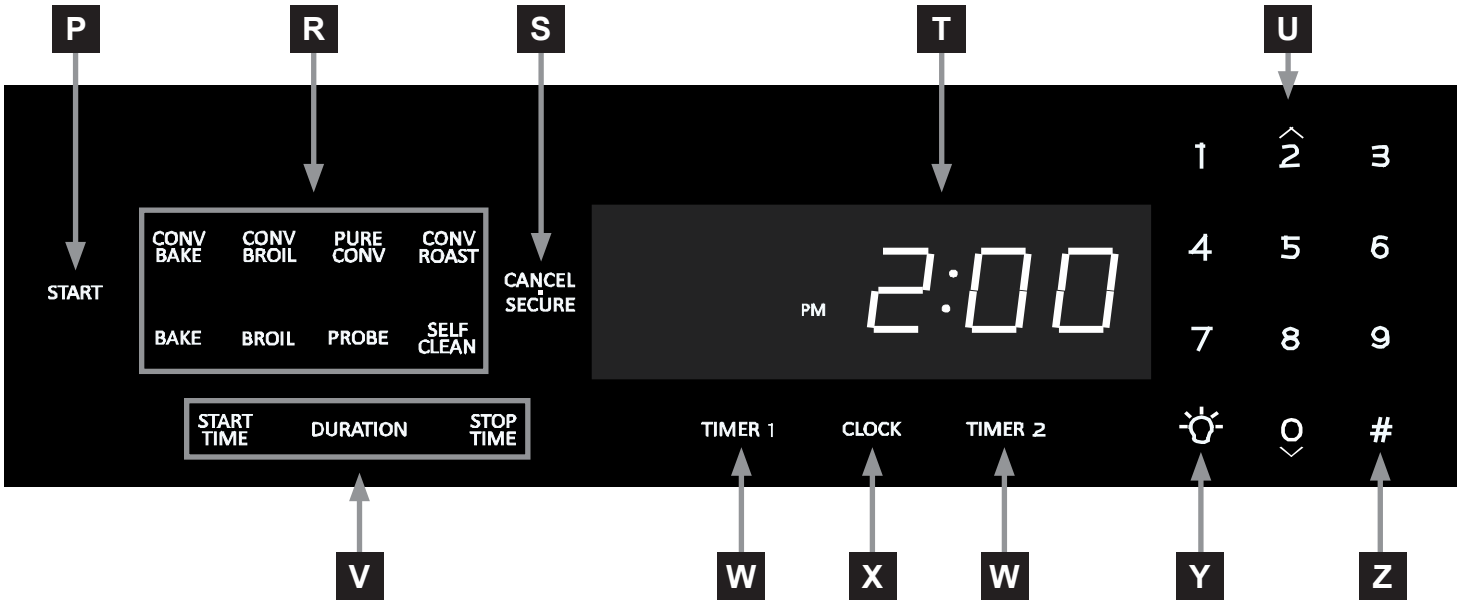

P	**START key**	When you use the various features (or modes) on your oven, select the cooking mode first, then press the **START** key. Also, use the **START** key to start the timers. See ***Operating the Oven***.
R	**Cooking mode keypad**	Select the type of cooking you want to perform by pressing one of the cooking mode keys. Also includes the **SELF CLEAN** and **PROBE** keys.
S	**CANCEL·SECURE key**	Use this key to turn off your oven. This key sets all temperature settings back to zero and turns off any features (except the timer) that are currently in use. It also activates the lock-out feature.
T	**Display**	The control panel display provides various types of information about the oven, including the current time (once the clock is set), the current cook settings and the cooking temperature. See below for the symbols that appear on the display.
U	**Number keypad**	The number keypad is used to set the temperature, cook time or the clock. See ***Operating the Oven***.
V	**Delay timed cooking keys**	Use these keys to set the oven to turn on or off automatically at a later time. See page 16 for instructions.
W	**TIMER keys**	Use the **TIMER 1** and **TIMER 2** keys to time an event. The two timers operate separately from each other. You can use them even if the oven is not in use. They do not turn the oven on or off. See page 16.
X	**CLOCK key**	Use this key to set the clock. See page 10.
Y	**Light key**	Located on the number keypad. If you need to turn the oven light on or off, press the light key.
Z	**Sabbath key (#)**	Use this key to start Sabbath mode. See page 20.

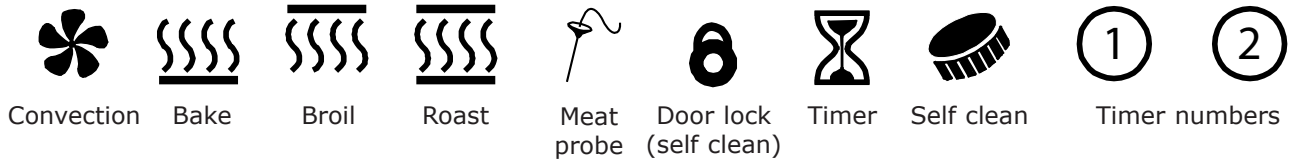

Display Symbols

Getting to Know Your Range

About the Cooktop

A	**Burner control knobs**	Use the knobs to turn on the burners and adjust the flame size. The indicator above each knob illuminates when a burner is on.
B	**Trim rings**	Located behind each knob. They prevent liquids from getting into the range's internal parts.
C	**Spill tray**	The spill tray catches any food that falls through the cooktop grates.
D	**Grates**	The porcelain coated cast iron grates support the cooking utensils during cooking. They are removable to allow the area below and around the burners to be cleaned easily.
E	**Backguard**	The range comes standard with a three inch backguard installed. It protects the wall from the effects of heat and splattering grease. An optional six inch and a nine inch backguard are also available as well as island style trim.
F	**Burners**	The range generates a spark to light the burner when you turn the knob to "**HIGH**". Gaskets around the underside of the burner bases prevent spilled liquids from leaking into the range's internal parts.

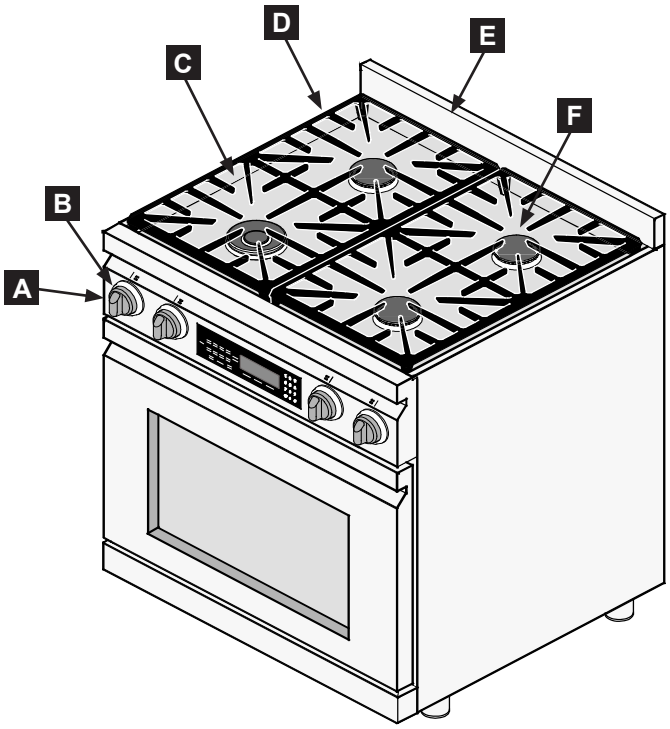

Burner Locations

G 1300 to 9500 BTU standard burner

H 1700 to 15,000 BTU standard burner

J 800 to 18,500 BTU SimmerSear burner

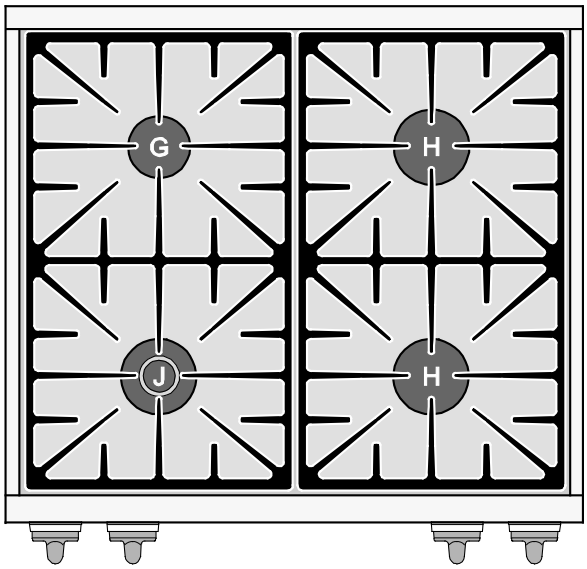

Special Cooktop Features

Perma-Flame™: The Perma-Flame instant re-ignition feature automatically re-lights a burner quickly if it goes out. With Perma-Flame, your cooking experience is uninterrupted because the flame is re-ignited at the same level as when it went out.

Smart Flame™: Smart Flame technology reduces the temperature under the fingers of the porcelain-coated cast iron grates. Smart-Flame extends grate life and protects the finish.

SimmerSear™: The SimmerSear burner is equipped with Dacor's exclusive precision burner control system. It allows you to cook with a wide range of heat settings, from simmer to sear.

Cooktop Assembly

⚠ WARNING

- Assemble the burners and grates only when the cooktop is cool.
- If you have the optional Dacor grill or griddle, installing the range knobs in the wrong position may result in damage to it.

Remove the burner rings, burner caps and grates from their shipping packages.

SimmerSear Burner Assembly

1. Install the SimmerSear burner ring on top of the SimmerSear burner base. Line up the indentations on the bottom of the ring with the pins on the base.
2. Set the outer SimmerSear burner cap on top of the burner ring. Make sure it is centered on top.
3. Set the inner SimmerSear burner cap on the center of the burner base. Line up the ridge on the bottom of the cap with the pins on the center of the base.

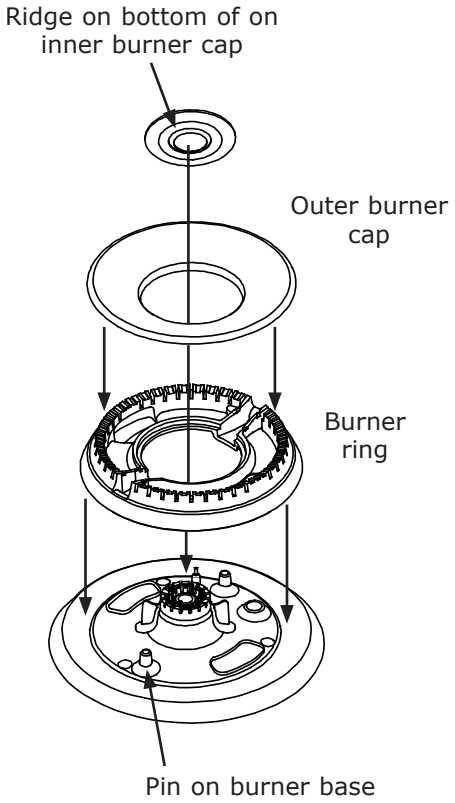

SimmerSear Burner Assembly

Standard Burner Assembly

1. Install the standard burner rings on the standard burner bases. Match the different sizes. Put the hole on the edge of each ring over the igniter. Center the tabs on the bottom of each ring in the hole in the center of each base.
2. Install the standard burner caps. The ridge on the bottom of each cap must surround the top of each ring.

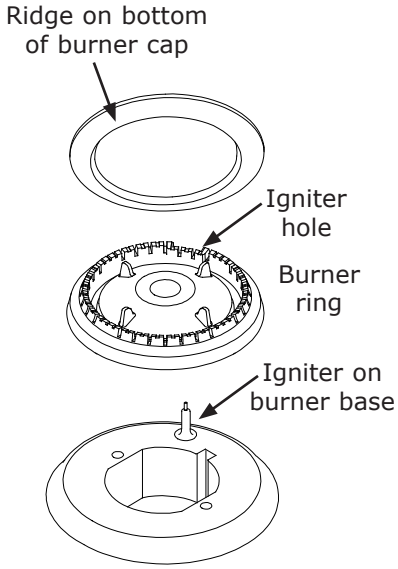

Standard Burner Assembly

Grate Installation

Gently set the grates on top of the spill tray. Put the legs of each grate into the corresponding dimples.

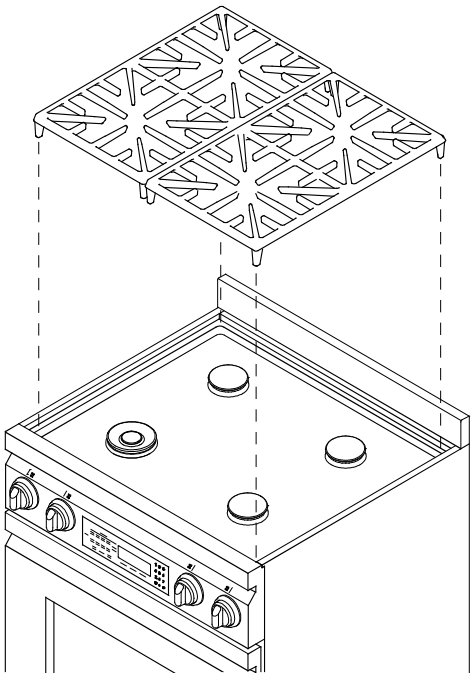

Selecting the Cookware

WARNING

- To avoid burns and scalding, always turn pan handles to a position where they cannot be easily hit. Also, handles should not extend over adjacent burners.
- Always set utensils gently onto the grates and center them so that they are well-balanced.
- Do not drag cookware across the grates. Sliding may damage the finish. Lift utensils to reposition them. Do not drop them on the grate.
- Cookware with rough bottoms can cause permanent damage to the coated surfaces on the grates.
- To avoid burns or a fire hazard, reduce the flame level if it extends beyond the bottom of the utensil. Flames extending up the sides are potentially dangerous.

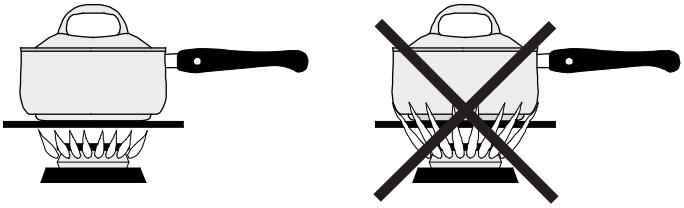

For overall safety and best cooktop performance, select the correct cooking utensil for the food being cooked. Improperly selected cooking utensils will not cook evenly or efficiently.

Use cookware that:

- Has flat, smooth bottoms.
- Is well balanced.
- Has tight fitting lids to keep heat, odors and steam in.

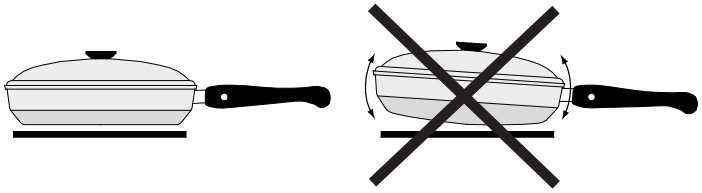

IMPORTANT

Avoid spills as much as possible. The porcelain surfaces of the grates, spill trays and burner caps are acid-resistant but not acid-proof. Some foods can cause permanent damage if allowed to remain on porcelain surfaces.

Lighting A Burner

WARNING

- To avoid the chance of fire, explosion or carbon monoxide poisoning, do not attempt to use your cooktop without the burners completely and properly assembled (see page 7). The burner rings spread the flame evenly around the burner caps. The burner rings must be properly seated for proper burner lighting and operation.
- In the interest of safety, always light the burner before putting the cooking utensil on the grate. Turn the burner knob to the **OFF** position before removing the utensil. Always check the position of the control knobs to make sure the cooktop is off when you are finished cooking.
- Do not turn the knob farther than the **HIGH** position until lit. Doing so may result in a burst of flame that could cause burns or damage to the surrounding area.
- Do not touch any part of the burner while the igniter is sparking. An electrical shock could result.
- Never light the burners with a match or other open flame.
- Always check to make sure all control knobs are in the **OFF** position when you are finished cooking.
- If the gas does not ignite after four seconds or if the flame goes out and gas escapes when attempting to light a burner, turn the knob to the **OFF** position. Open a window and allow at least five minutes for the gas to dissipate. Then, repeat the lighting procedure.

Each burner control knob has a small diagram next to it with an indicator light that tells you which burner it operates.

1. To light a burner, push in gently on the knob and turn it counter-clockwise to the **HIGH** position. The igniter will spark (click) repeatedly until the gas ignites. The burner should light within four seconds.
2. Once the burner is lit, set the flame height to the desired level by rotating the control knob further counterclockwise, then place the utensil on the grate.

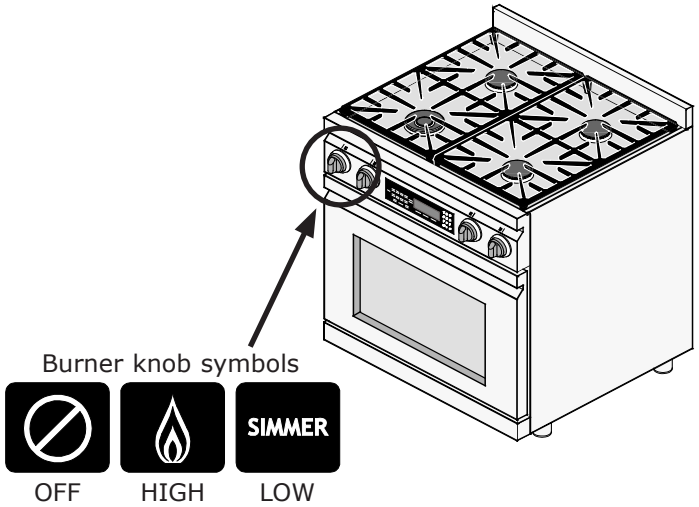

IMPORTANT

- The flame should burn evenly around the perimeter of the burner, except underneath each grate support finger, where the flame height is reduced by Dacor's Smart-Flame feature. A normal flame is steady and blue in color. Foreign material in the gas line, especially in new construction, may cause an orange flame during initial operation. The orange color will disappear with further use. Small yellow tips on the ends of the flames are normal when using LP gas.
- If the flame is not even around the edge of the burner, wait for the cooktop to cool and check to make sure the burner is assembled properly (see page 7).
- When the cooktop is cool the igniter may continue to spark if the control knob is set to the **LOW** position. The burner will stop sparking when warm. The tendency to spark when cold can be reduced by operating the burner at a higher flame setting for about 60 seconds. After 60 seconds, lower the flame to cook. The burner will also warm up faster if a utensil is placed on the grate. The igniter will also spark automatically if the flame is distorted by a draft or by the household ventilation system. Eliminate any drafts or reduce the ventilation blower speed to reduce this type of problem.
- To keep the burners operating properly, keep the burner igniters, burner rings and burner caps clean and dry. See ***Care and Cleaning*** starting on page 23. Dirty or wet igniters will result in constant sparking, even if there is a flame present.

Cooktop Tips

For superior cooking performance and to save energy:

- Reduce the flame height to the minimum level necessary to perform the desired cooking process. Food cooks just as quickly at a gentle boil as it does at a vigorous, rolling boil. A higher boil than is necessary wastes energy, cooks away moisture and causes a loss in food flavor and nutrients.
- Dacor's SimmerSear burner allows you greater precision control of the flame.
- Use low or medium flame heights when cooking in utensils made of materials that are poor conductors of heat, such as glass, ceramic and cast iron. Reduce the flame height until it covers approximately 1/3 of the utensil diameter to ensure even heating and reduce scorching.
- Minimize the amount of liquid or fat to reduce cooking times.
- Use a timer rather than repeatedly removing the lid to check food. Doing so will decrease cooking time and save energy.
- Thaw foods prior to cooking to reduce cooking time.

Control Panel Settings

Setting the Time

1. Press the **CLOCK** key. The colon between the minutes and seconds on the time display will begin to flash.
2. Enter the current time on the number keypad before the colon stops flashing. For example: For 12:08, press **1**-**2**-**0**-**8** on the keypad. Press the **#** key to change the AM-PM indicator.
3. Press **START**.

IMPORTANT

- The clock cannot be set during delay timed cooking, if one of the timers is in use or if self clean or Sabbath mode is active.
- After a power failure, the time on the display may flash, indicating that the time may not be correct.
- After pressing the clock key, you must enter the time and press **START** soon afterward. If you wait longer than six seconds between pressing keys, the display will go back to the original setting.

24/12 Hour Clock (Military Time)

The oven is set to 12-hour (non-military) time at the factory. 24 hour time is also known as military time. 1:36 PM = 13:36 military time.

If you want to switch the clock to 24 hour time or switch from military back to regular time:

1. Press and hold the **CLOCK** key for six seconds. The display will indicate the mode the clock is currently set to, **12 Hr** or **24 Hr**.
2. Press the **#** key to change the clock mode. To leave the setting as is, do not touch any keys.
3. Press **CANCEL·SECURE** to return to the main display. If you have set the clock to 24 hour time, the keypad will allow you to enter military time when setting the clock.

Setting the Temperature Scale

You can select the temperature scale (Fahrenheit or Celsius) the oven uses to display the cooking temperature. The oven is preset at the factory to Fahrenheit.

To change the temperature scale:

1. Press and hold the **BROIL** key.
2. The display will indicate the temperature scale the control panel is currently set to, "**F**" or "**C**".
3. Press the **#** key to change the temperature scale. To leave the setting as is, do not touch any keys.
4. Press **CANCEL·SECURE**. The control panel will go back to the regular clock display, set to the new temperature scale.

Before Using the Oven...

- Dacor recommends turning the oven on for one hour at 500°F to burn off any residual oils used during the manufacturing process. Any of these oils left on the inner parts can cause an undesirable smell the first few times the oven is used.
- When you use your oven to bake or roast, it preheats automatically. The preheat cycle rapidly brings the oven chamber up to the proper cooking temperature. It takes several minutes to preheat the oven. Preheat time depends on the temperature settings. The time may be longer depending on the type of electrical supply in your community. There is no preheat cycle for any of the broil modes.
- After you pull food out of the oven, it will continue to cook. This process is called "carry-over." The larger the portion of food, the longer it will cook. It is best to let the meat rest after it comes out of the oven for 10 to 15 minutes before carving. Doing so will allow the meat to retain its natural juices and make it easier to carve.

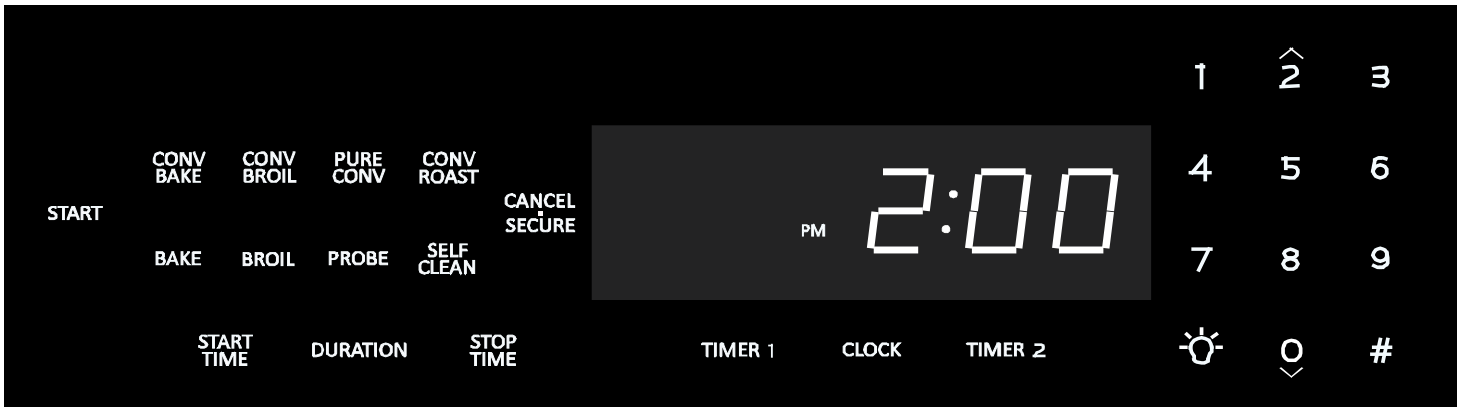

Oven Racks

You may use either rack type on any level.

⚠ WARNING

To reduce the chance of burns, position the oven racks when the oven is cool. If you must reposition a rack when the oven is hot, use potholders.

To insert the standard oven racks:

1. Insert the end of the rack with the safety notches into the oven first.
2. Attach both sides of the rack to the rack supports in the oven as shown in the diagram below.
3. Begin to slide the rack in, and then, lift up so that the safety notches clear the ends of the rack supports.
4. Push the rack all the way in with both hands.

To remove the standard oven racks:

1. Grasp the rack with both hands and pull gently straight out toward you until it stops.
2. To remove the rack completely, lift the front of the rack up about six inches and continue to pull it out. Lifting the rack releases the safety notches. The safety notches reduce the chances of a rack coming out of the oven accidentally.

To insert the optional GlideRack™ oven rack:

You can pull the optional GlideRack oven rack out further than the included standard racks and still support heavy pots and pans full of food. It is great for heavier foods and the optional Dacor baking stone.

1. Hold the rack with the guides fully extended away from you (see the diagram below).
2. Align both sets of safety clips (right and left) on the back of the guides with the oven rack supports as shown.
3. Begin to slide the rack in, lifting the front safety clips over the front of the oven rack supports.
4. Push the rack all the way to the back.
5. Grasp the rack in the center of the front and pull. The rack should come forward while the guides remain in place.

To remove the optional GlideRack oven rack:

1. Grasp it with both hands and pull gently straight out toward you until it stops.
2. To remove the rack completely, lift the front up about six inches and continue to pull it out. Lifting it releases the safety clips. The safety clips reduce the chance of the rack coming out of the oven accidentally.

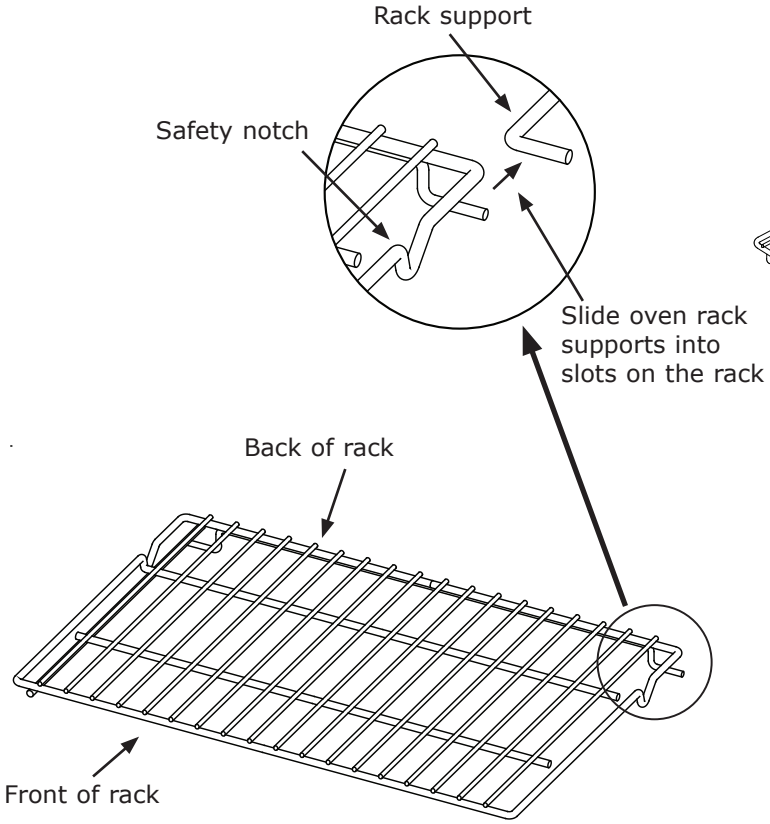

Standard Oven Rack

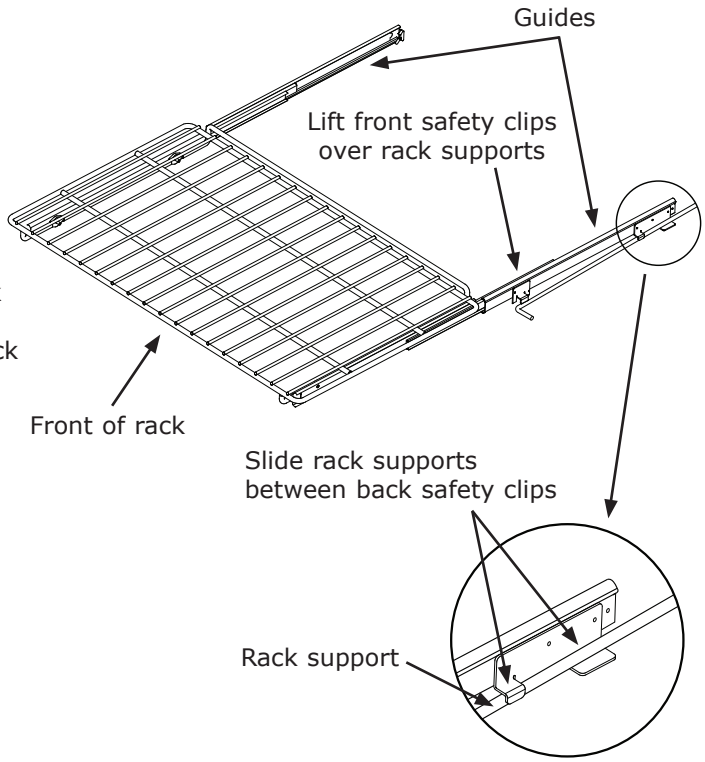

Optional GlideRack Oven Rack

Operating the Oven

Starting Your Oven

1. Adjust the racks to the appropriate level.
2. Determine the best cooking mode for the type of food to be cooked. Select from the following:
   - **CONVECTION BAKE** - A combination of the convection fan and a bottom heat source. Good for single rack items in a deep pan.
   - **CONVECTION BROIL** - A combination of the convection fan and a top heat source. Good for items that do not need to be flipped, such as thinner cuts of meat, fish and garlic bread.
   - **PURE CONVECTION™** - Uses convection cooking only for even heat. Use for baked goods and multiple rack cooking.
   - **BAKE** - Cooks with a bottom heat source only. Commonly used for basic recipes.
   - **BROIL** - Cooks using a top heat source alone. Use for grilling smaller cuts of meat or toasting bread.
   - **CONVECTION ROAST** - Combines top and bottom heat sources with the convection fan. Best for rib roasts, turkeys, chickens, etc.

   See pages 13 to 15 for detailed descriptions of the various cooking modes.

   IMPORTANT

   The broil modes will not work when the meat probe is connected.
3. Press the key for the desired cooking mode. The preset (jump-in) temperature for that mode will appear on the display along with the symbol(s) for the selected cooking mode (see above).
4. To cook at the preset temperature, press **START**. To cook at a different temperature enter it (for example **4-2-5**) on the number keypad, then press **START**. You can enter any temperature between 100°F and 555°F. The suggested broil temperature is 555°F.
5. If you are using Pure Convection or one of the bake or roast modes, **"PRE-"** for preheating, along with the current oven temperature will appear on the display until the oven reaches the set temperature. Once the oven reaches the set temperature (usually in 10 minutes), it will beep and **"PRE-"** will disappear. Carefully place your food in the oven. Excessive browning will occur if you put the food in too soon.

Turning Off Your Oven

To turn the oven off, press the **CANCEL·SECURE** key.

NOTE

After you turn off the oven, the cooling fans may continue to run until the range's internal parts have cooled down.

Changing the Temperature

(after you press **START**)

1. Press the key for the current cooking mode. The current cooking mode appears on the display (for example **BAKE**).
2. Enter the temperature on the keypad (for example **3-7-5**) and press **START**.

Changing the Oven Cooking Mode

(after you press **START**)

To change to a different cooking mode while the oven is on, for example to change from convection bake to bake:

1. Press the key for the new cooking mode, for example **BAKE**.
2. Press **START**.

Preset (Jump-in) Temperature Settings

Below is a list of the jump-in temperatures for the various cooking modes (see step 3 of the ***Starting Your Oven*** section on this page). This feature reduces the need to always enter the temperature when starting you oven.

Cooking Mode	Preset Temperature
Bake	350°F
Convection bake	325°F
Pure Convection	325°F
Convection roast	375°F
Broil	555°F
Convection broil	555°F

Lock-Out Feature

If you want to disable the keys on the control panel when the oven is not in use:

- Push and hold the **CANCEL·SECURE** key for about four seconds. The control panel keys will stop working and "**OFF**" will appear on the display. Only the **CANCEL·SECURE** and the oven light keys remain functional.
- To reactivate the control panel, press and hold the **CANCEL·SECURE** key for four seconds.

12 Hour Timer Feature

The oven's 12 hour timer feature automatically turns it off after 12 hours of continuous use. The 12 hour timer resets if you change the cooking temperature or cooking mode. This feature does not apply to the cooktop.

The range ships from the factory with this feature enabled.

To disable or enable the 12 hour timer feature:

- With the oven off, push and hold the **TIMER 1** key for about ten seconds, until the control panel beeps. "**ON**" will appear on the display if the 12 hour timer is enabled.
- Push the **SELF CLEAN** key to disable (or enable) the 12 hour timer.
- Push **START** to save the changes and return to the clock display.

Understanding the Various Oven Cooking Modes

The three basic styles of cooking in an oven:

- **BAKING** - The gentle cooking of dry goods such as cookies, cakes, soufflés, etc.
- **ROASTING** - The cooking of meats or vegetables over a period of time.
- **BROILING** - Cooking with an intense heat for a short amount of time.

Bake

Uses only a heat source from below the food. This mode is the stand-by, non-convection mode. All baked items will turn out nicely in this mode.

Baking Tips

- For best results, use a single rack in the lowest position when using bake mode. For cooking on multiple racks, Dacor recommends using one of the convection modes. See the following pages.
- Follow your recipe's original cooking time and temperature.
- Do not open the oven door frequently during baking. Look through the oven door window to check the progress of baking whenever possible.
- Use the timers to determine baking time.
- Wait until the shortest recommended baking time before checking the food. For most baked goods, a wooden toothpick placed in the center should come clean when the food is done.

Common Problems When Using Standard Bake Mode		
Problem	May Be Caused By	What to Do
Cookies burn on the bottom.	Oven door opened too often.	Set timer to shortest recommended cooking time and check food when timer beeps. Use door window to check food.
	Incorrect rack position used.	Change rack position.
	Dark, heat absorbing cookie sheets used.	Use shiny, reflective cookie sheets.
Cookies are too brown on top.	Rack position being used is too high.	Change rack position.
	Food placed in oven during preheat.	Wait until oven is preheated.
Cakes burn on the sides or are not done in the center.	Oven temperature too high.	Reduce oven temperature.
	Dark, heat absorbing cake pans used.	Use shiny, reflective cake pans.
Cakes crack on top.	Oven temperature too high.	Reduce oven temperature.
Cakes are not level.	Oven and/or oven rack not level.	Level oven and rack as needed.
Pies burn around the edges or are not done in the center.	Oven temperature too high.	Reduce oven temperature.
	Dark, heat absorbing pans used.	Use shiny, reflective pans.
	Oven and/or rack over-crowded.	Reduce number of pans.

Understanding the Various Oven Cooking Modes (continued)

Your range offers three convection cooking modes:

- **Pure Convection**
- **Convection Bake**
- **Convection Roast**

As a general rule, in the convection modes time is about 25% shorter. Set the timer 15 minutes before the shortest stated time and add more time if necessary.

For Pure Convection and Convection Bake Modes:

Some recipes, especially those that are homemade, may require adjustment and testing when converting from standard to convection baking. If you are unsure how to convert a recipe, begin by preparing the recipe using the standard bake settings. After achieving acceptable results, follow the convection guidelines in the Dacor Cooking Guide. If the food is not cooked to your satisfaction during this first convection trial, adjust one recipe variable at a time (such as cooking time, rack position, or temperature) and repeat the convection test. If necessary, continue adjusting one recipe variable at a time until you get satisfactory results.

Pure Convection

The uniform air circulation provided by Pure Convection allows you to use more oven capacity at once. Use this mode for single rack baking, multiple rack baking, roasting, and preparation of complete meals. Many foods, such as pizzas, cakes, cookies, biscuits, muffins, rolls and frozen convenience foods can be successfully prepared on two or three racks at a time. Pure Convection is also good for whole roasted duck, lamb shoulder and short leg of lamb.

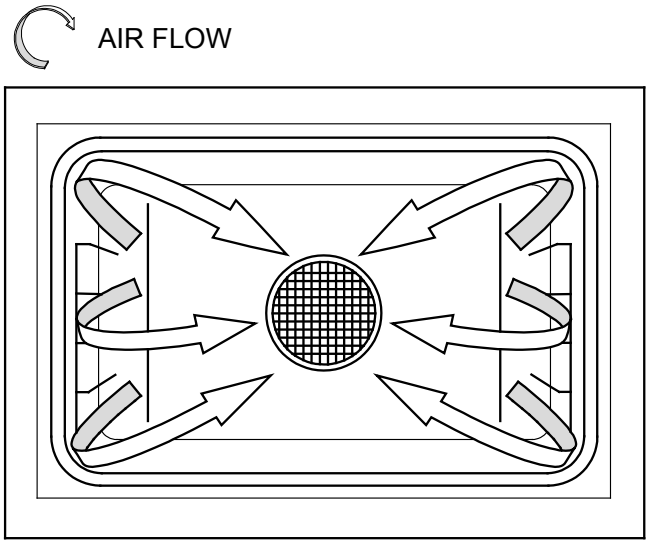

Multiple Rack Baking in Pure Convection Mode

- Typically, when baking on two racks, use rack positions #1 and #3 or #2 and #4 (counting from the bottom up) for best results. When cooking a full meal, use rack positions #1, #3 and #5 for best results.
- When adapting a single rack recipe to multiple rack baking, it may be necessary to add to the baking time due to the extra bulk of the food in the oven.

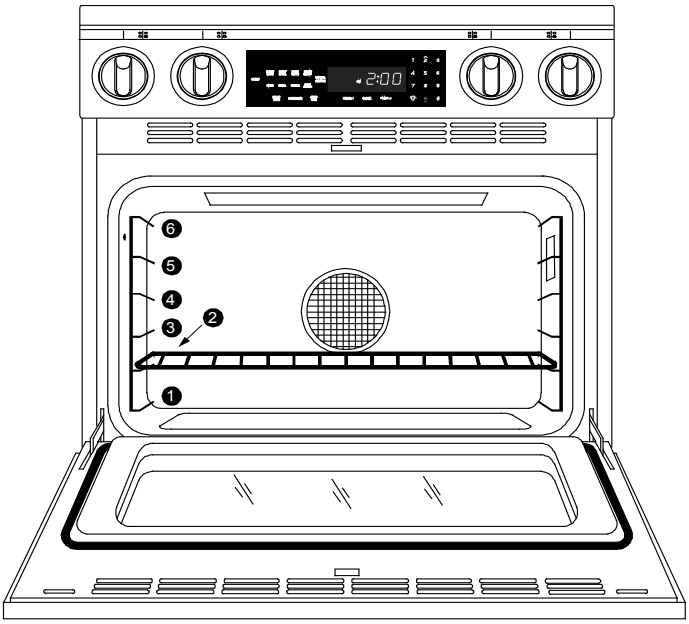

Convection Bake

Use this mode for single rack baking. The combination of the convection fan and bottom heat source is best for fruit crisps, custard pies, double-crusted fruit pies, quiches, yeast breads in a loaf pan, and popovers. Also, items baked in a deep ceramic dish or earthenware clay pots are best in this mode. Most of these items cook in a deep pan and require browning on the top and bottom.

Convection Roast

Your range's convection roast mode uses a combination of the convection fan and heat sources above and below the food. It is best for rib roasts, turkeys, chickens, etc.

Roasting Tips

- All baking modes can be used to successfully roast in your oven. However, the convection roast mode is recommended to produce meats that are deliciously seared on the outside and succulently juicy on the inside in record time. Foods that are exceptional, when prepared in the convection roast mode, include: beef, pork, ham, lamb, turkey, chicken and cornish hens.
- Always roast meats fat side up in a shallow pan, using a roasting rack. Always use a pan that fits the size of the food being prepared. No basting is required when the fat side is up. Do not add water to the pan. It will cause a steamed effect. Roasting is a dry heat process.
- Poultry should be placed breast side up on a rack in a shallow pan that fits the size of the food. Brush poultry with melted butter, margarine or oil before and during roasting.
- When using the roast mode, do not use pans with tall sides. They interfere with the circulation of heated air over the food.
- If using a meat thermometer, insert the probe halfway into the center of the thickest portion of the meat. For poultry, insert the thermometer probe between the body and leg into the thickest part of the inner thigh. To ensure an accurate reading, the tip of the probe should not touch bone, fat or gristle. Check the meat temperature ⅔ of the way through the recommended roasting time. After reading the meat thermometer once, insert it ½ inch further into the meat, then take a second reading. If the second temperature registers below the first, continue cooking the meat.
- Remove meats from the oven when the thermometer registers 5 to 10°F below the desired temperature. The meat will continue to carry-over.
- Allow roasts to stand 15 to 20 minutes after roasting in order to make carving easier.
- Roasting times always vary according to the size, shape and quality of meats and poultry. Less tender cuts of meat are best prepared in bake and may require moist cooking techniques. Follow your favorite cookbook recipes.
- Reduce spatter by lining the bottom of the roasting pan with lightly crushed aluminum foil.

Your range offers two broil modes:

- **Broil**
- **Convection Broil**

Broiling is a quick and flavorful way to prepare many foods, including steaks, chicken, chops, hamburgers and fish.

WARNING

- To avoid burns. keep the oven door completely shut when using the broil modes.
- To avoid damage to the meat probe, remove it from the oven when using either of the broil modes.

Broil

This mode uses a top heat source. It is best for broiling smaller amounts of food.

Convection Broil

This mode uses a combination of the convection fan and a top heat source. It is best for items that do not need to be flipped such as, thinner cuts of meat, fish and garlic bread.

Broiling Tips

- It is normal and necessary for some smoke to be present to give the food a broiled flavor.
- Setting the timer is recommended to time the broiling process.
- Always use a broiler pan and grill to provide drainage for excess fat and grease. Doing so will reduce spatter, smoke and flare-ups.
- Start with a room temperature broiler pan for even cooking.
- Use tongs or a spatula to turn and remove meats. Never pierce meat with a fork because the natural juices will escape.
- Broil food on the first side for a little more than half of the recommended time, then season and turn. Season the second side just before removing the food from the oven.
- To prevent sticking, lightly grease the broiler grill. Excess grease will result in heavy smoke. For easier cleaning, remove the broiler pan and grill when the food is removed.

Timers

WARNING

The timers on your range do not turn the oven on or off. They are only for timing purposes. When you want to turn the oven off automatically, use the ***Delay Timed Cooking Features***.

IMPORTANT

Pressing the **CANCEL·SECURE** key does NOT turn off the timers.

- Your range is equipped with 2 built-in timers
- You can use both of them at the same time.
- You can time from 1 minute up to 99 hours and 59 minutes.

To use the timers on your range:

- Press the **TIMER 1** or **TIMER 2** key.
- Enter the hours and minutes to be timed on the keypad and press **START**. To enter 11 hours, 30 minutes, press **1-1-3-0**. To time 25 minutes, press **2-5**. When you press **START**, the time will appear on the display and begin to count down.

When the timer is done counting down, **0:00** will appear on the display. The timer number will flash on the display and the alarm (a beeping sound) will sound. The alarms for Timer 1 and Timer 2 have different patterns.

Timer	Alarm Pattern
1	1 second on, 1 second off, repeat
2	1 second on, 1 second off, 2 seconds on, 1 second off, repeat

Press the **TIMER 1** (or **TIMER 2**) key to stop the alarm.

While a timer is running you can:

- Press **CLOCK** to view the current time.
- Press **TIMER 1** to view the time left on (or set) **TIMER 1**.
- Press **TIMER 2** to view the time left on (or set) **TIMER 2**.

To change the amount of time on a timer:

1. Press the **TIMER 1** or **TIMER 2** key.
2. Enter the new time on the number keypad and press **START**.

To stop a timer before time runs out:

- Press the **TIMER 1** or **TIMER 2** key twice.
- The timer will stop and the display will clear.
- Press the **CLOCK** key to return to the main display.

Delay Timed Cooking Features

If you want to set the oven to automatically turn itself on or off at a later time, you can use the delay timed features.

WARNING

Food safety is an important consideration when using the delay timed features. To avoid potential sickness and the spoiling of food, take the following steps:

- Avoid using foods that will spoil while waiting for the oven to start cooking. Typical foods to avoid include those containing eggs and dairy products, cream soups and cooked or uncooked meats, poultry and fish.
- Do not allow foods to remain in the oven after it turns completely off (after hold mode). When the temperature drops below 140°F, bacteria can develop.
- If cooking will not begin immediately, place only very cold or frozen food into the oven. Most unfrozen foods should never stand in the oven for more than two hours before cooking begins.

Things to Know About Delay Timed Cooking

- The delay timed options work for all of the various cook modes, except broil and convection broil.
- You may use the timers while using the delay timed features. The timers do not have an effect on any of the delay timed cooking options.
- The delay timed cycle can be canceled at any time by pushing **CANCEL·SECURE**.

The three delay timed cooking keys are:

- **START TIME:** The time the oven starts cooking.
- **DURATION:** The amount of time the oven cooks before it goes into hold mode (see facing page for description).
- **STOP TIME:** The clock time the oven turns off and goes into hold mode.

When you set 2 of the 3 above, the oven automatically calculates the third.

Ways to Use Delayed Timed Cooking

- Set the time the oven turns on (**START TIME**) and set it to turn off at a later time using either the **DURATION** key or the **STOP TIME** key.
- Set the **START TIME** only, then turn the oven off manually when you are done cooking.
- Turn the oven on manually and set it to turn off at a later time using either the **DURATION** key or the **STOP TIME** key.

How to Use Delay Timed Cooking

NOTE

Delay-timed cooking cannot be used in Sabbath mode.

1. Adjust the racks to the appropriate level.
2. Put the food in the oven.
3. Press the key for the desired cooking mode (except broil or convection broil).
4. Enter the desired cooking temperature on the number keypad.
5. If you want to turn the oven on immediately and turn off automatically at a later time, skip to step 8.
6. Press the **START TIME** key.
7. Enter the time you want the oven to start on the keypad. For 12:35, press **1-2-3-5**. You may enter a time up to 22 hours and 59 minutes ahead of the present time. Press the **#** key to change "**AM**" or "**PM**."
8. If you want to set the stop time or cooking duration, press either the **STOP TIME** or **DURATION** key (otherwise skip to step 9.) Using the **DURATION** key allows you to determine when the oven will stop cooking by entering the amount of time the oven is on. Using the **STOP TIME** key allows you to determine when the oven will stop cooking by entering the clock time. Using either key achieves the same result.
9. Press **START**.
10. If you entered a **START TIME**, the oven will start at the start time entered.
11. If you entered a **DURATION** or **STOP TIME** the oven will cook until the time entered and then, go into hold mode.

IMPORTANT

The time required to preheat the oven must be included in the cook time. For cooking temperatures 350°F and below, add 20 minutes to the cook time. Increase the cook time as the temperature increases above 350°F.

About Hold Mode

- When you set the oven to stop cooking using the **DURATION** or **STOP TIME** keys, it will go into hold mode ("**HLd**" appears on the display) when it reaches the end of the cook time you have set. The oven will keep the temperature at 150°F for two hours.
- Press **CANCEL·SECURE** to turn the oven all the way off.
- To prevent sickness, do not allow foods to remain in the oven after it is off (after hold mode turns off.)

Other Things to Know About Delayed Timed Cooking

When the oven is in delay timed mode:

- Push the **CLOCK** key to view the clock (current time).
- Push the **START TIME** key to view the current start time setting.
- Push the **STOP TIME** key to view the current cook time setting.
- Push the **DURATION** key to view the current cook time setting.

Using the Meat Probe

When you cook foods like roasts and poultry, the internal temperature is the best way to tell when the food is properly cooked. Your oven's meat probe is an easy way to take the guesswork out of roasting. You can use it to cook food to the exact temperature you desire. The probe can be set from 100°F to 200°F.

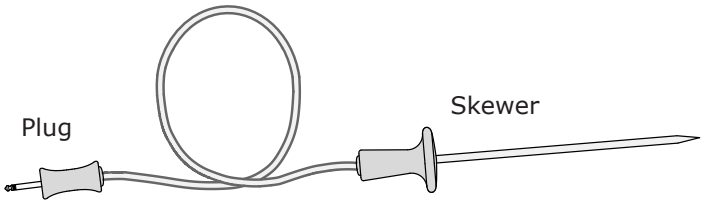

WARNING

- To avoid the possibility of burns, use hot pads to handle, connect, and unplug the meat probe when the oven is hot.
- Use the handles to insert and remove the meat probe's skewer and to connect it to the oven. Pushing or pulling on either end of the cable could damage the meat probe. To avoid breaking the meat probe, make sure the food is completely defrosted before inserting the skewer.
- To prevent damage, never leave the meat probe inside the oven when it is not being used, especially when broiling or during the self clean cycle.
- Using a meat probe other than the one provided with your oven may result in damage to the probe and/or the oven.

NOTE

- The meat probe does not work with broil or convection broil and Sabbath modes. Plug in the meat probe when using the above modes, the meat probe symbol will flash indicating an error.
- If the meat probe is accidently disconnected after the **PROBE** key is pressed, the meat probe symbol will flash and the error message "**OPn**" will appear on the display.

Meat Probe Instructions

1. Prepare the meat for cooking prior to setting the oven. Insert the meat probe skewer into the center of the meat. Make sure that the skewer is not inside any fatty portions of the meat and does not touch any bones. The point should rest in the thickest part of the meat. When you are cooking fowl, the tip of the skewer should rest toward the center of the bird.
2. Before placing the meat in the oven and with the door closed, push the **BAKE, CONV BAKE, PURE CONV** or **CONV ROAST** key. The preset temperature will appear on the display. If you want to cook using a different oven temperature, enter it on the number keypad.
3. Press **START**.
4. Allow the oven to preheat. Excessive browning may occur if the meat is placed in the oven during preheat mode (when **"PRE-"** appears on the display).
5. Once the oven has preheated (**"PRE-**" disappears), put the meat in the oven using pot holders. Insert the meat probe plug into the connector inside the oven.
6. Push the **PROBE** key. The preset probe temperature (160°F), as well as the probe symbol, will appear on the display. If you want to cook using a different probe temperature, enter it on the keypad. Use the ***USDA Minimum Safe Cooking Temperature Chart*** on the facing page as a guideline for the type of meat you are cooking.
7. Press **START**. If you do not press **START**, the probe mode will not start.

When the meat probe is in use, the oven will automatically control the cooking time. The temperature on the display during cooking is the temperature measured inside the meat. The oven will continue to cook until the meat temperature reaches the temperature you have entered. When the meat is done, the oven will go into hold mode. The temperature will reduce to 150°F for two hours to keep the meat warm and safe for serving. To prevent sickness, do not allow foods to remain in the oven after it has turned off. Press **CANCEL·SECURE** to cancel hold mode and turn the oven completely off.

To change the meat probe temperature during cooking:

1. Press **PROBE**. The current probe temperature setting will appear on the display.
2. Enter the new temperature. The oven will automatically change to the new probe temperature. If you do not enter a temperature, the oven will continue to cook at the current setting.

To change the cooking mode during meat probe cooking:

1. Press the **CANCEL·SECURE** key.
2. Press the **BAKE**, **CONV BAKE**, **PURE CONV** or **CONV ROAST** key. If you want to cook using a temperature different than the oven's preset temperature, enter it on the number keypad.
3. Press **START**.

To cancel meat probe operation while the oven is cooking:

Press the **PROBE** key twice. Disconnect the meat probe from the connector and remove it from the oven. The oven will return to any previous settings that were entered before the **PROBE** key was pressed.

Important Details About Meat Probe Use

- You must select the specific cooking mode (**BAKE**, **CONV BAKE**, **PURE CONV** or **CONV ROAST**) before you press the **PROBE** key.
- When you press the **PROBE** key the preheat cycle is disabled and the amount of time required to heat the oven is extended. For best results, select the cooking mode and allow the oven to preheat prior to pressing the **PROBE** key and putting the meat in the oven.
- The meat probe function will automatically cancel after 30 seconds if the meat probe is not connected. The meat probe symbol will flash on the display.
- The meat probe feature takes precedence over the delay timed cooking feature. The oven will continue to cook the meat until it reaches the selected meat probe temperature regardless of the **STOP TIME** or **DURATION** setting, then go into hold mode.

USDA Minimum Safe Internal Cooking Temperatures for Various Foods

GROUND MEAT AND MEAT MIXTURES	
Beef, pork veal, lamb	160°F
Turkey, chicken	165°F
FRESH BEEF, VEAL, AND LAMB	
Medium rare	145°F
Medium	165°F
Well Done	170°F
POULTRY	
Chicken/turkey, whole (temp taken in thigh)	180°F
Poultry breasts, roast	170°F
Poultry thighs, wings, legs	180°F
Duck and goose	180°F
Stuffing	165°F
FRESH PORK	
Medium	160°F
Well done	170°F
HAM	
Fresh (raw)	160°F
Pre-cooked (reheat)	140°F

NOTE

The minimum safe internal cooking temperatures are subject to change. There are changes in bacteria and the temperatures required to eradicate them. For the most current information, contact the USDA.

USDA Meat and Poultry Hotline:

Phone: (800) 535-4355
www.fsis.usda.gov

Dehydrating/Defrosting

Your range can be used to dehydrate or defrost foods at low heat settings in the Pure Convection mode.

WARNING

To avoid food poisoning, cook meats immediately after defrosting them.

To dehydrate or defrost foods:

1. Adjust the racks to the appropriate level.
2. Place the food on the center of the oven rack. If you are dehydrating, prepare food as recommended, then place it on a drying rack.
3. Press the **PURE CONV** key.
4. To defrost meats, enter the temperature, up to 150°F, on the number keypad. To dehydrate, start with the temperature setting below. When dehydrating, you may need to experiment with higher temperatures.
5. Press **START**.

Food Type	Dehydrating Temperature
Fruit	100°F
Vegetables	125°F
Meat	150°F

Dacor recommends that you use one of the timers to time the process.

Dehydrating Tips

Equipment Recommended

- Half sheet pan or jelly roll pan with ½" rim all the way around
- Baking rack that fits inside the half sheet pan
- Cheesecloth
- 4 quart sauce pot with lid
- Steamer basket that fits inside 4 quart saucepan. One that is perforated and opens up will work well.
- Slotted spoon
- Paper towels
- A sharp knife

When you dehydrate:

1. Wash and remove excess moisture from all fruits and vegetables before dehydrating.
2. Cut fruits and vegetables into uniform pieces.
3. You can add honey, spices, lime juice or orange juice to give the fruit a different flavor.
4. It is best to dehydrate on a baking rack with a pan underneath to catch any juices. If using a rack when dehydrating small fruit, put cheesecloth over the rack to allow for maximum air circulation and to prevent the fruit from sticking to the rack.
5. Place the food onto the center of the oven rack.

Continued...

Dehydrating/Defrosting (Continued)

Solving Discoloration Problems

To prevent darkening during dehydration and storage, you should steam blanch apples, apricots, peaches, nectarines, pears or foods that will oxidize.

To steam blanch:

1. Add one inch of water to a four quart sauce pot. Insert the steam basket and place the fruit in it.
2. Cover the pot and steam for one to two minutes.
3. Remove with a slotted spoon and dab with a paper towel to remove excess moisture before dehydrating.
4. Apples, pears, pineapples, and some other fruits will brown or darken during dehydration. To prevent discoloration, dip fruits in pineapple juice or lemon juice after steam blanching.

Creating a Candied Effect

To give fruit a candied effect and to help retain color, blanch them in a simple syrup. You can candy the fruits mentioned above as well as figs and plums. The basic ratio for a simple syrup is one cup of sugar to one cup of water. Add these ingredients to a four quart stock pot and bring to a boil. Stir until all the sugar dissolves. Remove the saucepan from the cooktop and allow it to cool. Dip fruit into the simple syrup after it has cooled.

Preventing Tough Skins When Dehydrating

You should water blanch items with tough skins such as grapes, prunes, dark plums, cherries, figs and some types of berries. Water blanching these types of fruit will crack the skins so that moisture can escape and dehydration can be done more effectively.

To water blanch:

1. Bring two quarts of water to boil in a four quart sauce pot.
2. Drop the fruit in the water for one to two minutes, or until the skin begins to crack.
3. Remove the fruit with a slotted spoon and dab dry with a paper towel before dehydrating. The pit can be left inside or removed half way through the dehydrating process.

Defrosting Tips

- Food that takes an exceptional amount of time to defrost will not defrost well in a convection oven.
- You should not defrost anything that would normally take over two hours to thaw. The food will begin to spoil because the defrost temperature is not high enough to cook the food.
- If you have a partially defrosted turkey, rib roast or other large cut of meat, you may continue to defrost it in your convection oven. If wing tips and legs begin to dry out when you defrost poultry, you may wrap the tips with aluminum foil.
- If you are defrosting a small cut of meat, lay it on a flat cookie sheet with a one inch rim to catch juices as the meat thaws.
- Thick, frozen casseroles such as lasagna will not defrost well in your oven. Instead, defrost according to the food manufacturer's suggestions. You may also defrost casseroles in the refrigerator overnight. You should leave the food in its original container and keep it covered.
- You can bake some foods from frozen. Some examples are: pizza, frozen pastries, croissants, cookies, etc. Before baking frozen food, allow the oven to preheat.

Proofing

You can use your range to proof yeasted doughs at a low and draft-free temperature using the bake mode.

1. Press the **BAKE** key.
2. Enter the temperature of 100°F on the number keypad.
3. Press **START**.
4. Place the dough in a greased bowl inside of the oven. Cover it with either a damp cloth or plastic wrap coated with a nonstick spray.
5. Turn on the oven light.
6. Set the timer for the amount of rise time in the recipe.

Sabbath Mode

The Sabbath mode on your oven complies with Jewish laws for use on the Sabbath and Holy Days. This feature allows the oven to perform two types of cooking, bake and Pure Convection.

When the oven is set to Sabbath mode, it disables the following features:

- The oven light
- All keys, except **CANCEL·SECURE**, **START** and the **0** and **2** keys on the number keypad.

NOTE

- **"SAb"** appears on the display when Sabbath mode is in operation.
- As with all other cooking modes, when setting the control panel for Sabbath operation all keys must be pressed within six seconds of each other. Otherwise the control panel will automatically clear.
- Sabbath mode will not work with the meat probe connected (the meat probe symbol will flash).
- Delay-timed cooking cannot be used in Sabbath mode.
- In the event of a power outage, the oven will return to Sabbath mode at the temperature it was last set to when power is restored.
- If one or both timers are running, the oven cancels timer operation when Sabbath mode is selected.
- You may want to use a rack thermometer to keep track of the oven temperature.

Setting Up the Sabbath Feature

1. Press the **#** key.
2. Press the **BAKE** or **PURE CONV** key.
3. Press the **0** or **2** keys repeatedly if you want to change the pre-selected cooking temperature shown on the display.
4. Press (only) the **START** key. The oven will go into Sabbath mode and cook using the mode selected in step 2.

Things to Know About Sabbath Mode

- The **CANCEL·SECURE** key on your oven remains active so that you can turn off the Sabbath feature or turn off the oven.
- When the oven is cooking, pressing the **2** key on the number keypad, then **START**, tells the oven to raise the temperature by 25°F (15°C). Pressing the **0** key on the number keypad, then **START**, tells the oven to lower the temperature by 25°F (15°C). In compliance with Jewish law, the heating element will be adjusted randomly when these keys are pressed and no changes will be seen on the display.

Please visit www.star-k.org for further information about Sabbath compliance and usage of this product.

Adjusting the Oven Temperature

Your oven is equipped with a feature that allows you to calibrate the temperature inside the oven to match the display value without the help of a service technician. Due to various conditions, the actual temperature inside may vary somewhat from the displayed temperature. The setting may also vary from mode to mode.

⚠ WARNING

Do not adjust the probe or self clean offset temperatures. The offset for the probe and self clean offsets must remain at 0 for proper and/or safe operation.

To change the offset temperature:

1. Place an oven thermometer inside the oven.
2. Check the temperature variance by running the oven for one hour in each mode at 350°F (except broil modes). In broil the normal operating temperature is 555°F. Take note of the temperature variance in each mode.
3. With the oven off, press and hold the **0** and **#** keys on the number keypad at the same time. After about three seconds "**PAS**" will appear on the display.
4. Immediately enter **6428** on the number keypad, then **START**. "**SLCt**" (select) will appear on the display.
5. Press the key for the cooking mode you want to change the offset for (**CONV BAKE**, **CONV BROIL**, **PURE CONV**, **CONV ROAST**, **BAKE** or **BROIL**).
6. Enter an offset temperature value from 1 to 35°F (1 to 18 for ovens set to Celsius). Press the **#** key after entering the numeric value if you want the offset to be a negative (-) value. Press **#** again to toggle the (-) setting off. "**Edit**" appears on the display when you start to enter the offset value.
7. Press **START** to save the setting.
8. Repeat steps 5 and 6 above for any other cooking modes you need to offset.
9. Press **CANCEL·SECURE** to exit offset mode.

Food Placement

NOTE: The rack positions mentioned below are counting from the bottom up.

- For best results when baking on two racks, use rack positions #2 and #4 or #1 and #3 with the oven set to Pure Convection or convection bake mode. For best results when baking on three racks, use rack positions #1, #3 and #5 with the oven set to Pure Convection mode.
- Turn pans on the racks so that the long sides run left to right, as you face them.
- When you are cooking a food item that is very heavy, Dacor recommends the optional GlideRack oven rack. You can pull it out further than a standard rack, making it easier to check the food, stir or add ingredients.
- Heavier roasting pans and dishes will cook better on rack position #1.
- When using a baking stone, use rack position #1 for best results. If you put a baking stone on the optional GlideRack oven rack, instead of one of the standard oven racks, you can pull the stone out of the oven further, making pizza easier to remove.

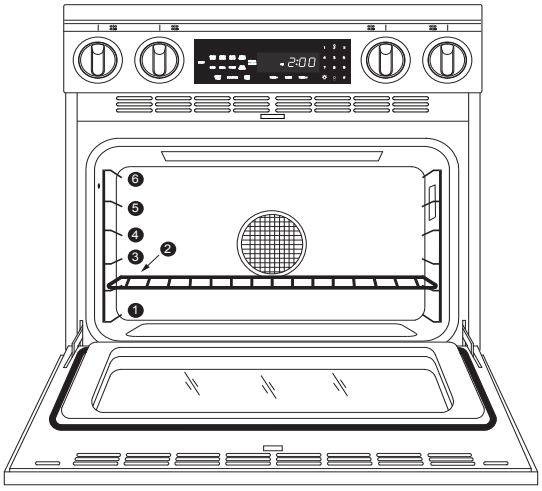

Oven Rack Positions

The Best Use of Bake Ware

- You should bake cakes, quick breads, muffins and cookies in shiny, reflective pans for light, golden crusts. Avoid old, darkened, warped, dented, stainless steel and tin-coated pans. They heat unevenly and will not give good baking results.
- Use medium gauge aluminum sheets with low sides when preparing cookies, biscuits and cream puffs. Dacor cookie sheets, with their low profiles, will give you the best results.
- Bake most frozen foods in their original foil containers, placed flat on a cookie sheet. Follow the package recommendations. When using glass bake ware, reduce the recipe temperature by 25°F, except when baking pies or yeast breads. Follow the standard recipe baking time for pies and yeast breads.
- Use the pan size and type recommended by the recipe for best results.
- For roasting, Dacor's optional "V" shaped rack and broil/roast pan works best to allow air circulation around the food. Dacor's roasting pan works particularly well and two of them will fit side by side in a 30-inch oven. The kit also comes with a grill that fits inside the pan to cook flat cuts of meat.

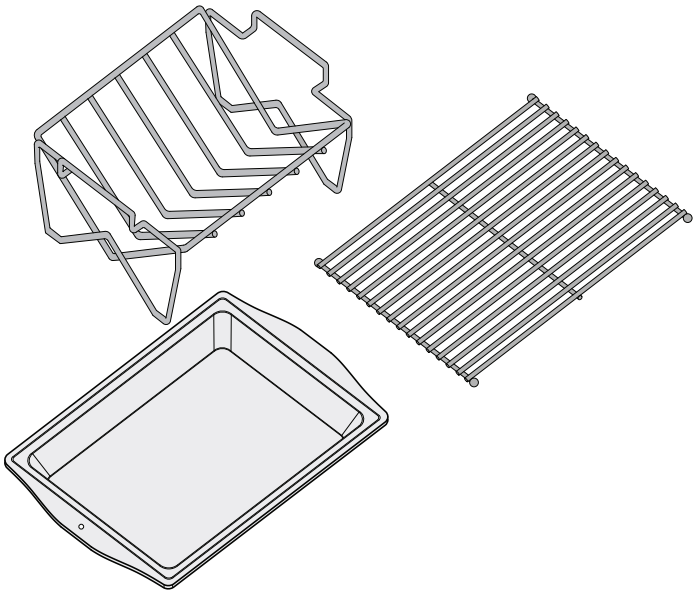

High Altitude Cooking

Due to the lower atmospheric pressure at higher altitudes, foods tend to take longer to cook. Therefore, recipe adjustments should be made in some cases. In general, no recipe adjustment is necessary for yeast-risen baked goods, although allowing the dough or batter to rise twice before the final pan rising develops a better flavor. Try making the adjustments below for successful recipes. Take note of the changes that work best and mark your recipes accordingly. You may also consult a cookbook on high altitude cooking for specific recommendations.

Altitude (feet)	Baking Powder for each teaspoon decrease by:	Sugar for each teaspoon decrease by:	Liquid, for each cup add:
3000	5-10%	10-25%	5-10%
5000	10%	10%	20%
7000	25%	20%	20-25%

⚠ WARNING

- Clean only the parts of the range listed in this manual. Clean them only in the manner specified.
- To avoid dangerous fumes or damage to your range's surfaces and accessories, use only the types of cleaning solutions specified in this manual.
- To avoid burns, make sure that all parts are cool before cleaning.
- To prevent damage, do not use abrasive or corrosive cleaners or applicators such as steel wool or scouring pads, on any part of the range unless instructed to do so. Use only a sponge, soft cloth, fibrous or plastic brush, or nylon cleaning pad for cleaning the surfaces of your range.
- Do not use a steam cleaner to clean the range. Steam could penetrate the electrical components and cause a short circuit.
- Do not try to remove heavy spills with a sharp object such as a knife or metal spatula. Sharp objects may scratch your range's surfaces.

Your Oven's Self Clean Feature

About the Self Clean Cycle

- The oven will run better and produce better baked goods when it is clean. During self cleaning, the oven is heated to very high temperatures which burn off any deposits on the surfaces of the oven. Self cleaning eliminates the need for manual scrubbing of interior surfaces. The self clean process takes about three hours.
- It is normal for the oven to emit smoke during the first few self clean cycles. It is also normal for the oven to emit popping sounds during self cleaning. These sounds are caused by the expansion and contraction of metal surfaces when the oven heats up and cools down.
- The self clean process takes about three hours.
- Self clean mode will not function if the meat probe is connected.

⚠ WARNING

- Always wipe up excess grease and other food spills with a damp cloth prior to using the self clean cycle. Doing so will minimize smoke and increase efficiency. See the proper cleaning instructions on this page.
- Do not touch the outside surfaces of the oven during the self clean cycle. They will be hot.
- Racks, the convection filter, meat probe or any other items left in the oven during self cleaning will become damaged or damage the oven. See page 26 for directions for polishing a rack that is left in the oven accidently during self cleaning.

How to Use the Self Cleaning Feature

1. Before self cleaning the oven, remove the racks, the convection filter, all cookware (pots, pans, forks, etc.), the meat probe, foil and any other loose objects from the oven chamber. See page 27 for instructions on how to remove and clean the filter.
2. Clean soil from the porcelain surfaces of the door outside of the door gasket. Rinse surfaces well with a solution of vinegar and water, then wipe dry. Heavily soiled areas may be cleaned with a non-scratching scouring pad.
3. Clean the door gasket by dabbing it with a solution of water and mild soap.

⚠ WARNING

- Use caution when cleaning the door gasket. Rubbing or displacing it may damage the tight door seal required for proper cooking and self cleaning.
- Do not try to force the door open after it is locked. Damage to the door or latch may result.

4. Turn on kitchen fans or vents to help remove odors during the self clean cycle.
5. Make sure the oven door is shut.
6. Press the **SELF CLEAN** key, then press **START**.

The control panel automatically locks the oven door during self cleaning. The latch prevents the door from being opened since the high interior oven temperatures can easily cause injury. If the door is not shut, an error message will appear on the display. To correct the problem, press **CANCEL·SECURE** and wait approximately one minute, then close the door. When the door is properly closed, start the self clean process again.

The display shows the self clean cycle status:

- The clean symbol indicates that self clean is in process.
- The lock symbol indicates that the door is latched.
- "**ON**" indicates that the heating elements are on.

If you want to stop the self clean cycle, press the **CANCEL·SECURE** key. The oven door will remain locked until it is safe enough to open. The lock symbol will disappear from the display when the door lock is released. You will still need to exercise caution when the door lock is released because the inside of the oven may still be hot.

After the self clean cycle is complete:

- The door latch will release when the inside has cooled down. The clean icon, lock icon and "**ON**" will disappear from the display. Exercise caution because the oven will still be hot (about 400°F) at the time the door lock is released.
- Reinstall the convection filter and oven racks before using your oven.
- You may notice a powder ash residue in the bottom of the oven after self cleaning. This is normal. Use a damp cloth or sponge to wipe up the residue after the oven cools down.

Continued...

Self Cleaning Tips

- If any soil remains in the oven after the self clean cycle is done, you may repeat the cycle if you want.
- Self clean the oven regularly to prevent excessive soil build-up. Doing so will make the self clean cycle work better and reduce smoke and odors.

Setting the Oven to Self Clean at a Later Time

1. Prepare the oven for self cleaning as instructed on page 21. Observe all safety precautions and remove all items listed from inside the oven. Clean the door gasket and around the door as instructed.
2. Close the oven door.
3. Press the **SELF CLEAN** key.
4. Press the **START TIME** key.
5. Enter the desired start time. For example, press **1-2-3-0** for 12:30. You may enter a time up to 22 hours and 59 minutes ahead of the present time.
6. Press **START**.
7. When you press **START**, "**Delay**" will appear on the display and the oven door will lock. The oven will start to self clean at the time you have selected.

While the oven is set to clean at a later time:

- If you want the display to return to the clock, you may push the **CLOCK** key.
- If the clock is displayed, you may push the **START TIME** key to check the self clean start time.
- When self clean starts, "**Delay**" will disappear and "**ON**" will appear on the display.

To cancel the time delayed self clean cycle:

- Press **CANCEL·SECURE**.
- If the self clean process has not started, allow about a minute for the door to unlock before attempting to use the oven.
- If the oven is in the middle of the self clean process, the door will unlock when the oven has cooled down enough to open safely. The oven will still be hot (about 400 °F).

General Cleaning Information

The cooktop is exposed to extremely high temperatures. The grates are put under a lot of stress when hot utensils are placed on them. In addition, the cooktop parts are occasionally exposed to acidy food spill-overs. These severe operating conditions, cause the porcelain enamel parts on your cooktop to undergo a change in appearance over time. If you care for and clean these parts carefully, you will slow down, but not eliminate, the aging process.

Cleaning the Knobs and Trim Rings

⚠ WARNING

- Do not soak the knobs in water or put them in a dishwasher.
- Do not remove the trim rings from the range. Clean only the outside edges of the trim rings. If you get moisture inside the range, damage can occur.
- To prevent damage, do not use abrasive or corrosive cleaners or applicators.
- If you have the optional Dacor grill or griddle, installing the range knobs in the wrong position may result in damage to it.

- Wash the knobs regularly with a solution of warm soapy water. Dacor recommends hand dishwashing liquid.
- Turn the knobs to the **OFF** position to remove them for cleaning or replacement. Grasp each knob and pull straight back, off of the valve shaft.
- Clean the outside edges of the trim rings while the knobs are removed. Wipe them with a soft damp rag.
- After cleaning, attach the SimmerSear burner knob A as shown below. The SimmerSear knob has a wider space between the large flame icon and the simmer icon than the standard burner knobs. Align the "D-shaped" opening on the back with the end of the valve shaft. Carefully push it on until it stops.
- Attach the remaining knobs which operate the standard burners B. If you have the optional Dacor grill or griddle, the two knobs with the words "**MAX GRIDDLE**" go on the right burner valve stems.

SimmerSear Knobs

Standard Knobs

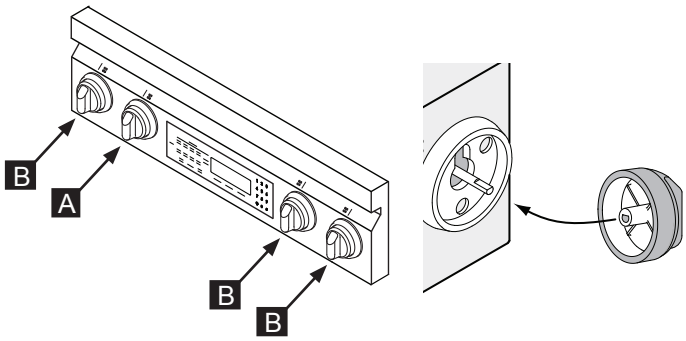

Knob Placement

Cleaning the Cooktop

To keep the cooktop looking and operating its best, clean it after every use. Also, quickly wipe up spills that occur while cooking. Be careful not to touch any hot areas. Spills that remain on hot burner parts will be very difficult to clean, especially if allowed to burn on. Certain types of food, such as tomatoes, citrus juices, vinegar, alcohol and milk can damage the finishes if you allow them to stand for any length of time.

In addition, the igniters may not spark or work properly if the burner parts or the igniters themselves are not clean and dry.

Cooktop Disassembly

⚠ WARNING

- Electric shock and burn hazard. Turn off power to the range at the circuit breaker or fuse box and make sure the burners are cool before disassembly.
- Do not clean the cooktop grates or burner parts in a dishwasher. They will be damaged.
- Dry and re-assemble the burners and grates completely before use.

- When the cooktop is cool, remove the grates from the top of the cooktop.
- Disassemble the burners. Lift the burner caps and burner rings off of the burners.

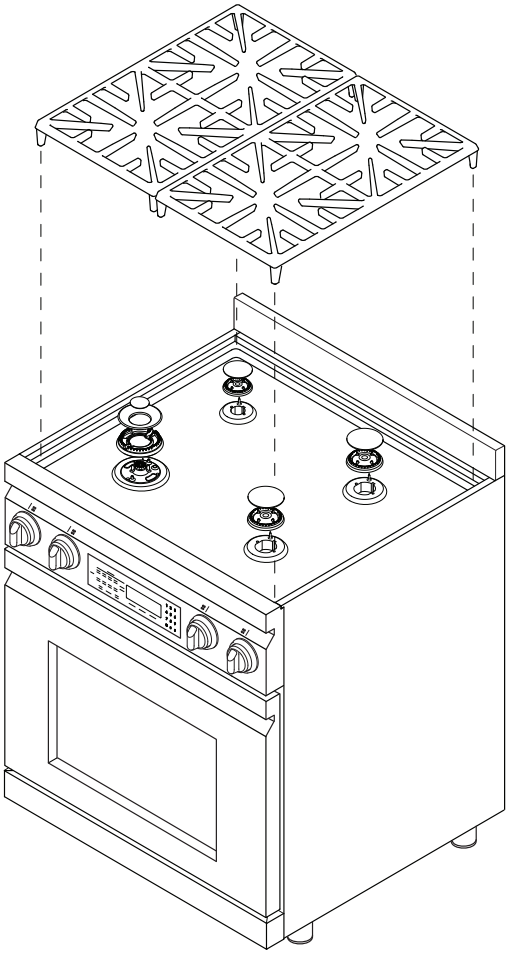

Cleaning the Burner Components and Igniters

⚠ WARNING

Use care while cleaning the igniters. The porcelain is fragile and can crack or break.

After disassembling the burners, check for any dirt or grime deposited on the individual parts, including the igniters.

1. Use a firm tooth brush to gently clean completely around the igniter, including all of the metal top and porcelain base. Do not use water to clean the igniters. If necessary, use a small amount of rubbing alcohol to help dissolve grime.
2. Examine the burner rings and the top of the SimmerSear burner head. Remove anything stuck in the holes and grooves with a straightened paper clip, wire or needle. Be careful not to scratch or damage the ring and head. Do not distort the shape of the holes or grooves.
3. Clean all of the burner parts, including the burner bases, with window cleaner or rubbing alcohol. Use a cleaning brush with plastic bristles or a firm tooth brush. When done, rinse the parts well with clean water. Dry all the parts thoroughly before re-assembling them.
4. Reassemble the burners according to the burner and grate assembly instructions on page 7. Turn on power and test the burners after reassembling them. If the flame is uneven, be sure that all the burner parts are properly positioned, then check for any remaining dirt or grime on the burner parts or igniter. If erratic sparking (clicking) is still present, make sure the igniter is completely dry. If the unit still exhibits problems after drying, call your local Dacor Authorized Service Agent.

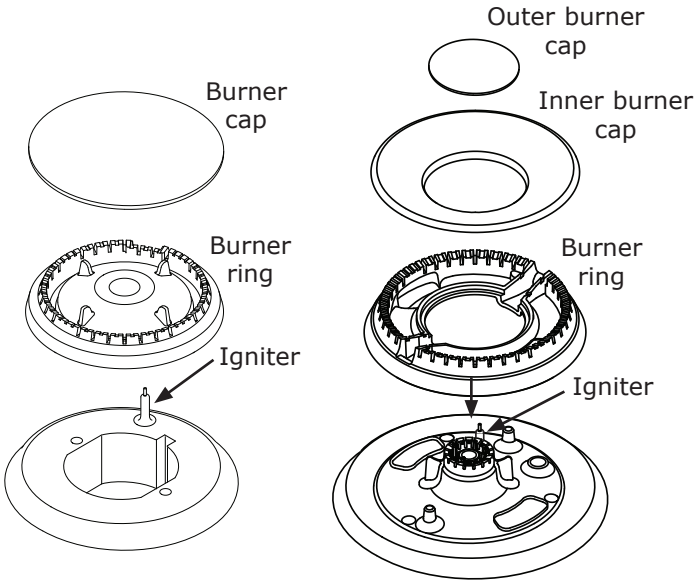

Standard Burner **SimmerSear Burner**

Continued...

Cleaning the Cooktop (Continued)

Grates, Spill Trays and Optional WOK Ring

⚠ CAUTION

Do not clean the cooktop grates, burner parts or WOK ring in a dishwasher. They will be damaged.

The grates, the spill tray and optional WOK ring are coated with a porcelain finish.

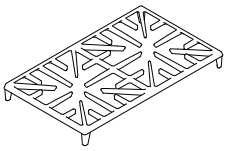

- For everyday cleaning, use a soft cloth or nonabrasive pad with warm soapy water to clean all of the porcelain parts.
- If necessary, tough stains may be removed by applying full-strength sprays such as Simple Green™, Ajax™ All-Purpose Cleaner or Formula 409™. To minimize wear, use the mildest cleaner needed to get the surface clean.
- For extremely stubborn stains, you may use a mildly abrasive cleaner or applicator, such as Soft Scrub™, Bon Ami™, S.O.S.® pads or other soap-filled steel wool pads. Use these cleaners with extreme care and only on occasion. Extensive use of these types of abrasives will eventually damage the porcelain enamel.

Cleaning the Exterior Surfaces

Oven Control Panel

⚠ CAUTION

Do not use abrasive cleaners or scrubbers on the control panel. They will permanently damage the finish.

- To avoid accidentally turning the oven on while cleaning the control panel, activate the lock-out feature. Press the **CANCEL · SECURE** key for six seconds. The lock-out feature disables the keys. When the control panel is locked, the word "**OFF**" appears on the display.
- When you want to re-activate the control panel, press **CANCEL · SECURE** for six seconds.
- Clean the control panel with the soft side of a sponge dampened with a mild solution of detergent and warm water. Dry the control panel completely with a soft, lint-free cloth.

Cleaning Glass Surfaces (Interior and Exterior)

- Use a mild glass cleaner to remove finger prints on glass surfaces. You may also clean glass surfaces with Dacor Cooktop Cleaning Creme. Use it according to the directions on the package.
- You may scrub the oven light lens with the rough side of a sponge and warm, soapy water. Be careful not to scratch the lens.

Cleaning Stainless Steel Surfaces

⚠ CAUTION

Always wipe stainless steel (silver colored) surfaces with the grain. To prevent scratching, do not use abrasive cleaners or scrubbers on stainless steel surfaces.

Clean stainless steel surfaces with a mild solution of detergent and warm water. Rinse and dry with a soft, lint-free cloth. You may also use Dacor Stainless Steel Cleaner on the stainless steel surfaces. Use it according to the directions on the package.

Cleaning Brass, Chrome and Copper Surfaces

⚠ CAUTION

To prevent scratching, do not use abrasive cleaners or scrubbers on metal surfaces.

Using a soft cloth, clean metal surfaces with a mild solution of detergent and warm water. Rinse and dry with a soft, lint-free cloth.

Cleaning the Oven Interior

⚠ WARNING

To avoid electrical shock or burns, turn off the oven and be sure that it is cool before cleaning.

Your oven's self clean feature eliminates the need for manual scrubbing of interior surfaces. The steps below are for cleaning surfaces and items that are not cleaned by the self clean process. To use the self clean feature see page 23.

Door Gasket (Seal)

⚠ WARNING

Take care when cleaning the door gasket. Rubbing or displacing it may damage the tight door seal required for proper cooking and self cleaning.

Clean the door gasket by dabbing it with a solution of water and mild soap. Do not scrub it or it will become damaged.

Oven Racks

To clean the oven racks, apply a solution of detergent and hot water. When you need to clean heavy soil, use a scouring pad such as steel wool with plenty of water. You may also use a solution of one cup of ammonia to two gallons of water.

If you accidentally leave the racks in the oven during self cleaning, you can polish them to make them easier to slide. Polish the rack edges with a soapy steel wool pad. Then apply a small amount of vegetable oil to the edges so that the racks slide more easily. Be aware that polishing will not completely remove the discoloration.

Convection Filter

⚠ WARNING

For your safety and proper oven performance, re-install the filter before using the oven to cook. If you don't, the spinning fan blades inside will be exposed.

The convection filter is located in the back of each oven chamber. Clean the filter regularly. If you allow it to become clogged, the oven's convection cooking modes will not work properly. You also need to remove the filter during the self clean cycle.

Removing your oven's convection filter:

When the oven is cool, put your fingers around the edges of the filter and gently push up.

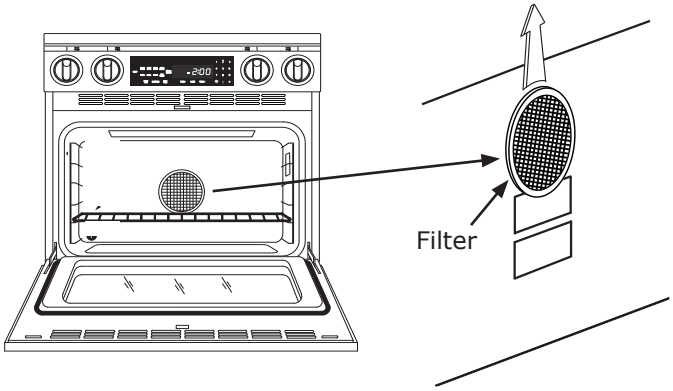

To clean the filter:

Soak it in hot, soapy water. Rinse well. You may also place it in a dishwasher on the top rack. Dry the filter before re-installing it.

Installing your oven's convection filter:

Carefully hook the metal clips on the back of the filter over the metal bar across the fan hole. Make sure it is centered over the hole. Be careful not to scratch the porcelain surfaces with the back of the filter.

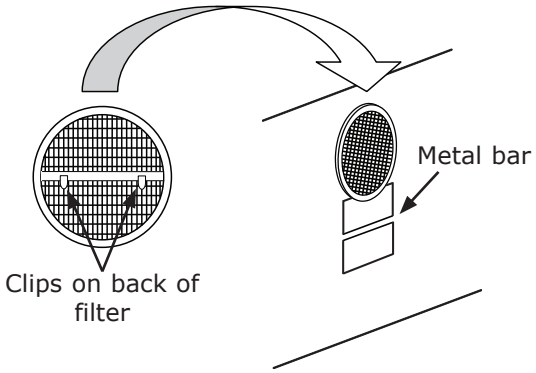

Meat Probe

⚠ WARNING

To prevent damage, do not immerse the meat probe in water.

The meat probe is constructed of silicone handles, a wire, a plug and a stainless steel skewer. To clean the skewer, use a scouring pad and hot, soapy water. When you clean the handles, wipe them with a soft sponge soaked with a solution of detergent and warm water.

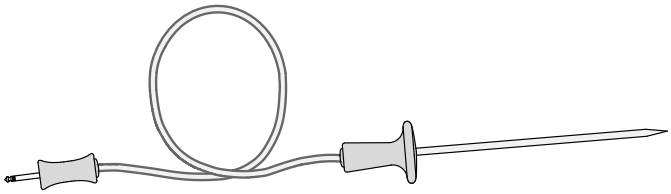

Optional Broil Pan

The broil pan has a porcelain enamel finish. When you clean it, use a solution of detergent and hot water. If the broil pan is heavily soiled, use a scouring pad with plenty of water. Rinse it well after cleaning.

Optional Roast/Broil Pan with "V" Shaped Rack

The roast/broil pan has a porcelain enamel finish. When you clean it, use a solution of detergent and hot water. If the roast/broil pan is heavily soiled, use a scouring pad and plenty of water.

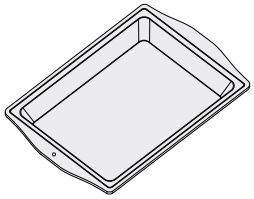

Rinse it well after cleaning.

The optional "V" Shaped rack and the grill are finished with an Excalibur™ nonstick coating. When you clean them, use a mild solution of detergent and warm water. Use the soft side of a sponge to scrub them and dry them with a lint-free cloth.

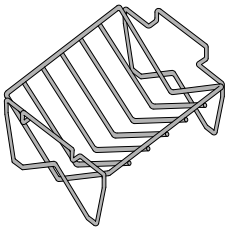

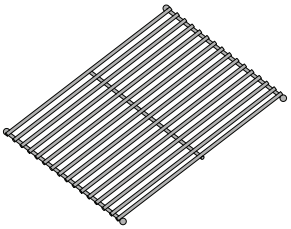

Optional Cookie Sheets

Clean the optional aluminum cookie sheets with a solution of detergent and warm water. Since aluminum can scratch, you need to use the soft side of a sponge. A way for you to keep cookie sheets cleaner is to use parchment paper over the cooking surface during baking. The parchment paper will also prevent food from sticking.

Cleaning the Oven Interior (Cont.)

Optional Baking Stone

Wash the optional baking stone with hot water and scrub it clean before you use it for the first time. Do not use any soap or detergents to wash the stone. The stone is porous and soap will get trapped inside. The trapped soap will affect the flavor of the food cooked on it. Do not be alarmed if the stone gets stains on it after it is used for a while. Stains do not affect the stone's ability to bake properly.

When you need to remove large food particles from the baking stone, use warm water and a scrub brush. If there is a lot of oil build-up, it may smoke and create odors. If you need to remove the oily build up, use a scouring pad or brush to remove it. You may also use a paste of baking soda and water to scrub off small stains.

Cleaning the Optional Dacor Griddle and Grill

Clean the griddle/grill after each use. Wash it thoroughly in hot soapy water to avoid stains from grease build-up. The griddle/grill is coated with a non-stick coating for easy cleaning. Warm water and liquid detergent are all that are needed for cleaning. Remove stubborn spots with a non-abrasive plastic mesh pad. To prevent scratching, do not use abrasives or abrasive cleaners. Use the soft side of a sponge to scrub it. Dry it with a lint-free cloth.

Replacing the Light Bulbs

WARNING

- To prevent electrical shock and/or personal injury, make certain that the oven and light bulb are cool and that power to the range has been turned off at the circuit breaker panel or fuse box before replacing the light bulb.
- Always make sure the lens cover is in place when using the oven. The lens cover protects the bulb from breakage.
- Replacing the lens cover without lining up the cutout with the light socket will damage the light fixture.
- Do not use a screwdriver to remove the lens.

Light bulb replacement is considered a homeowner maintenance operation. If the light does not work, before replacing it, please consult the ***Problem Solution Guide*** on page 30.

IMPORTANT

Do not touch the replacement halogen light bulb with your fingers. Halogen bulbs are sensitive to the oils from your hand. The oils from your hand will stick to the bulb and may cause it to burn out faster than normal.

To replace the light bulb, follow these steps:

1. Replace the light bulb only with Dacor part number 100429. See the facing page for ordering information.
2. Turn off power to the range at the circuit breaker panel or fuse box.
3. Hold your hand under the lens for support and gently pry it loose using a spatula or table knife. Pull the lens cover straight out.

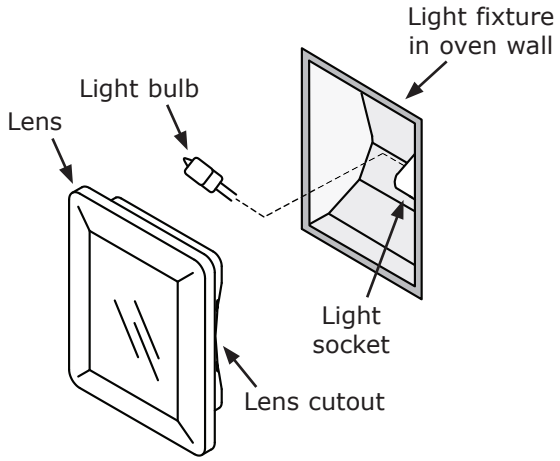

4. Grasp the old bulb and pull it straight out of the socket.
5. Using a glove, insert the new bulb into the socket.
6. As you reinstall the lens cover, line up the cutout on the inside rim with the light socket. Gently press it into its original position.
7. Turn the power to the range back on. Reset the clock (see page 10).

Replacement Parts and Accessories

Description	Dacor Part Number
Halogen light bulb (12 Volt 20 Watt)	100429
Dacor Stainless Steel Cleaner	A302
Dacor Cooktop Cleaning Cream	A300
Meat probe	72723
Wok ring	AWR4
Cooktop griddle	ADRT14
Cooktop grill	AGDRT14
Standard broil pan and broil pan grill	AER30BP
Large capacity roast/broil pan with “V” shaped rack	AORPVR
Island trim kit	ADTK30D
Six inch backguard kit	ADB3006
Nine inch backguard kit	ADB3009
Standard type oven rack	103807
GlideRack type oven rack	ARGO30
Pizza baking stone	ABS20
Cookie sheets* (three per carton)	ACS303
14” grate (two used per unit)	101524

* Dacor full sized cookie sheets maximize oven rack baking capabilities by utilizing the total usable rack space.

To order parts and accessories, contact your Dacor dealer or visit www.everythingdacor.com.

Problem Solution Guide - Oven

NOTE: See ***Common Problems When Using Bake Mode*** on page 13 for problems with baking.

Problem	May Be Caused By	What to Do
Nothing works.	Range not connected to electrical power.	Have an electrician connect range to properly wired electrical connection.
	Power is off.	Turn power on at circuit breaker panel or fuse box. Check for tripped circuit breaker or blown fuse.
	Control panel locked.	Press **CANCEL·SECURE** key for six seconds to reactivate control panel.
	Power outage.	Contact power company.
Oven will not heat.	Oven setting not correct.	Press **CANCEL·SECURE**. Follow instructions in ***Operating the Oven*** section.
	Oven set for delay timed cooking.	Oven will turn on automatically at preset time. Press **CANCEL·SECURE** to return to normal operation.
	Attempting to broil with meat probe connected.	Broil and convection broil settings will not work when meat probe is connected. Disconnect meat probe.
Foods over or under cook.	Incorrect cooking time or temperature.	Follow instructions in ***Operating the Oven*** section.
Oven shuts off by itself after it has been on for 12 hours.	12 hour timer is on. Unit is set to turn off automatically after 12 hours of continuous use.	Turn off 12 hour timer. See page 13.
Time on display not correct.	Time of day not set.	Set time. See ***Setting Up Your Range***.
	Power failure or power was turned off.	Reset time. See ***Setting Up Your Range***.
Time flashes on display.	Power failure or power was turned off.	Reset time. See ***Setting Up Your Range***.
Cannot set clock.	Oven in use. Clock cannot be set while oven is in use.	Turn off oven to set clock.
Oven does not self clean.	Door not shut tightly.	Check for obstructions. Close door tightly.
	Oven set for delay timed cleaning.	Oven will start to self clean at preset time. Press **CANCEL·SECURE** to return to normal operation.
	Oven not set properly.	Follow instructions in ***Care and Cleaning*** section.
	Meat probe connected.	Oven will not start self clean cycle when meat probe is connected. Disconnect and remove meat probe.
Oven light does not work (burners light and oven works OK).	Oven in self clean mode.	Light does not work when oven is in self clean mode.
	Oven in Sabbath mode.	Light does not work when oven is in Sabbath mode. See page 20.
	Light bulb burned out.	Replace light bulb. See ***Care and Cleaning*** section.
Oven light will not turn off.	Light key is set to on.	Press light key to turn light off.
Cooling fan continues to run after oven is turned off.	Normal operation.	The cooling fan may run for a while after the oven is turned off, until the internal parts have cooled.
Sabbath mode does not work.	Meat probe connected.	Oven will not start Sabbath mode when meat probe is connected. Disconnect and remove meat probe.

Before You Call for Service

Problem	May Be Caused By	What to Do
Oven door will not open.	Oven is set to self clean.	Check display. If lock symbol appears on display oven door cannot be opened. Wait for oven to complete self clean process or press **CANCEL·SECURE**. Door will unlock once oven has cooled.
Error code appears and stays on display, for example "**U55**."	An error code having a letter with a number following it that appears and stays on the display indicates a problem that cannot be resolved by the customer.	Call for service.

Problem Solution Guide - Cooktop

Problem	May Be Caused By	What to Do
Igniters do not spark.	Power not supplied to unit.	Have an electrician connect range to properly wired electrical connection.
	Power to range is off.	Turn power on at junction box. Check for tripped circuit breaker or blown fuse.
	Power outage.	Contact power company.
	Wet or dirty igniter.	Clean according to ***Care and Cleaning*** section.
No flame.	Igniter not working (no clicking sound).	Clean according to ***Care and Cleaning*** section.
	Wet or dirty igniter.	Clean and dry according to ***Care and Cleaning*** section.
	Gas is turned off.	Make sure the gas supply valve is in the on position.
	Gas supply interrupted.	Contact gas company.
Flame is distorted, yellow or very large.	Burner ring or burner cap is dirty or clogged.	Clean and dry according to ***Care and Cleaning*** section.
	Burner parts not properly positioned.	Make sure burner is assembled according to the ***Setting Up Your Range*** section.
	Range set up to use a different type of gas (Natural or LP) or set up for different altitude.	Have a qualified service technician check to make sure that the range is set up for the type of gas and the correct altitude.
	Gas regulator is not installed or faulty.	Have a qualified service technician check the gas regulator.
Igniter continues to spark (click) after flame ignites.	Burner is cold.	Burners may continue to spark for up to 60 seconds when cold and set to low. See ***Operating the Cooktop*** section for more information.
	Flame distorted by air draft.	Minimize any air drafts around the range. Close nearby windows.
	Wet or dirty igniter.	Clean and dry according to ***Care and Cleaning*** section.
	Burner ring or burner cap is dirty.	Clean and dry according to ***Care and Cleaning*** section.
	Burner parts not properly positioned.	Make sure burner is assembled according to the ***Setting Up Your Range*** section.
Flame goes out at low setting.	Air intake holes obstructed.	Check to make sure air holes on range are not blocked. See page 4 for locations.
	Low gas pressure.	Contact gas company for pressure test.

Getting Help

Before you request service, please review the ***Before You Call for Service*** section on page 30. If you have performed the checks in the ***Problem Solution Guide*** and the problem has not been remedied, please contact us at one of the numbers below. Prior to requesting service, it is helpful to be familiar with the warranty terms and conditions listed in the ***Warranty*** section on this page.

For warranty repairs, call:

Dacor Distinctive Service

Phone: (877) 337-3226 (U.S.A. and Canada)
Business Hours: 6:00 A.M. - 4:00 P.M. Pacific Time

For non-warranty repairs, call:

Dacor Customer Service

Phone: (800) 793-0093 (U.S.A. and Canada)
Business Hours: 6:00 A.M. - 5:00 P.M. Pacific Time

Contact us through our web site at:

www.Dacor.com

At Dacor, we believe that our quality of service equals that of our product. Should your experience with our service network or product be different, please contact our Customer Service Team and share your encounter with us. We will do our utmost to resolve the situation for you and deliver on our Dacor promise.

If you need anything clarified, just let us know.

Warranty

What Is Covered

CERTIFICATE OF WARRANTIES:
DACOR RANGES

WITHIN THE FIFTY STATES OF THE U.S.A., THE DISTRICT OF COLUMBIA AND CANADA*:

FULL ONE-YEAR WARRANTY

If your DACOR product fails to function within one year of the original date of purchase, due to a defect in material or workmanship, DACOR will remedy the defect without charge to you or subsequent users. The owner must provide proof of purchase upon request, and have the appliance accessible for service.

*Warranty is null and void if non-ETL approved product is transported from the U.S.

OUTSIDE THE FIFTY STATES OF THE U.S.A., THE DISTRICT OF COLUMBIA AND CANADA:

LIMITED FIRST YEAR WARRANTY

If your DACOR product fails to function within one year of the original date of purchase, due to a defect in material or workmanship, DACOR will furnish a new part, F.O.B. factory to replace the defective part. All delivery, installation, and labor costs are the responsibility of the purchaser. The owner must provide proof of purchase, upon request, and have the appliance accessible for service.

What Is Not Covered

- Service calls to educate the customer in the proper use and care of the product.
- Failure of the product when used for commercial, business, rental or any application other than for residential consumer use.
- Replacement of house fuses or fuse boxes or resetting of circuit breakers.
- Damage to the product caused by accident, fire, flood or other acts of God.
- Breakage, discoloration or damage to glass, metal surfaces, plastic components, trim, paint or other cosmetic finish, caused by improper usage or care, abuse or neglect.

THE REMEDIES PROVIDED FOR IN THE ABOVE EXPRESS WARRANTIES ARE THE SOLE AND EXCLUSIVE REMEDIES. THEREFORE, NO OTHER EXPRESS WARRANTIES ARE MADE, AND OUTSIDE THE FIFTY STATES OF THE UNITED STATES, THE DISTRICT OF COLUMBIA AND CANADA, ALL IMPLIED WARRANTIES, INCLUDING BUT NOT LIMITED TO, ANY IMPLIED WARRANTY OF MERCHANTABILITY OR FITNESS FOR A PARTICULAR USE OR PURPOSE, ARE LIMITED IN DURATION TO ONE YEAR FROM THE DATE OF ORIGINAL PURCHASE. IN NO EVENT SHALL DACOR BE LIABLE FOR INCIDENTAL EXPENSE OR CONSEQUENTIAL DAMAGES. NO WARRANTIES, EXPRESS OR IMPLIED, ARE MADE TO ANY BUYER FOR RESALE.

Some states do not allow limitations on how long an implied warranty lasts, or do not allow the exclusion or limitation of inconsequential damages, so the above limitations or exclusions may not apply to you. This warranty gives you specific legal rights, and you may also have other rights that vary from state to state.

fold here

NO POSTAGE
NECESSARY
IF MAILED
IN THE
UNITED STATES

BUSINESS REPLY MAIL
FIRST-CLASS MAIL PERMIT NO 1600 CITY OF INDUSTRY CA

POSTAGE WILL BE PAID BY ADDRESSEE

DACOR
ATTN WARRANTY PROCESSING DEPT
PO BOX 90070
CITY OF INDUSTRY CA 91715-9907

dacor
The Life of the Kitchen.®

Please visit www.Dacor.com to activate your warranty online.

WARRANTY INFORMATION

IMPORTANT:

Your warranty will not be activated until you activate it online or return this form to Dacor. If you have purchased more than one Dacor product, please return all forms in one envelope or activate the warranty for each product online.

Please rest assured that under no conditions will Dacor sell your name or any of the information on this form for mailing list purposes. We are very grateful that you have chosen Dacor products for your home and do not consider the sale of such information to be a proper way of expressing our gratitude!

Owner'üüü _____
Last (Please Print or Type) First Middle

üüü _____

City: _____ State: _____ Zip: _____

Purchase Date: _____ Email: _____ Telephone: _____

Dealer: _____

City: _____ State: _____ Zip: _____

Your willingness to take a few seconds to fill in the section below will be sincerely appreciated. Thank you.

1. How were you **first** exposed to Dacor products? (Please check one onl y.)
   - ❑ A. T.V. Cooking Show
   - ❑ B. Magazine
   - ❑ C. Appliance Dealer Showroom
   - ❑ D. Kitchen Dealer Showroom
   - ❑ E. Home Show
   - ❑ F Builder
   - ❑ G. Architect/Designer
   - ❑ H. Another Dacor Owner
   - ❑ I. Model Home
   - ❑ J. Other _____

2. Where did you buy your Dacor appliances?
   - ❑ A. Appliance Dealer
   - ❑ B. Kitchen Dealer
   - ❑ C. Builder Supplier
   - ❑ D. Builder
   - ❑ E. Other _____

3. For what purpose was the product purchased?
   - ❑ A. Replacement ***only***
   - ❑ B. Part of a Remodel
   - ❑ C. New Home
   - ❑ D. Other _____

4. What is your household income?
   - ❑ A. Under $75,000
   - ❑ B. $75,000 – $100,000
   - ❑ C. $100,000 – $150,000
   - ❑ D. $150,000 – $200,000
   - ❑ E. $200,000 – $250,000
   - ❑ F. Over $250,000

5. What other brands of appliances do you have in your kitchen?
   - A. Cooktop _____
   - B. Oven _____
   - C. Dishwasher _____
   - D. Refrigerator _____

6. Would you buy or recommend another Dacor product?
   - ❑ Yes
   - ❑ No

   Comments: _____

Thank you very much for your assistance. The information you have provided will be extremely valuable in helping us plan for the future and giving you the support you deserve.

Place Serial Number Label Here

cut here

cut here

Web site: www.Dacor.com
Corporate phone: (800) 793-0093