dacor
The Life of the Kitchen.®

Use and Care Manual
Downdraft Raised Vent

For use with models: RV30, RV36, RV46

Style varies, model RV30 shown

Table of Contents

Important Safety Instructions 1-2
Operating Your Raised Vent..... 3
Care and Cleaning 4-5
Before You Call for Service..... 5
Warranty and Service 6
Notes 7-8

American Made★Family Owned

To Our Valued Customer:

Congratulations on your purchase of the very latest in Dacor® products! Our unique combination of features, style and performance make us The Life of the Kitchen™, and a great addition to your home.

In order to familiarize yourself with the controls, functions, and full potential of your new Distinctive Appliance, we suggest that you thoroughly read this use and care manual, beginning with the ***Important Safety Instructions*** section.

All Dacor appliances are designed and manufactured with quality and pride, while working within the framework of our company value. Should you ever experience a problem with your product, please first check the ***Before You Call for Service*** section of this manual for guidance. It provides useful suggestions and remedies prior to calling for service.

Valuable customer input helps us to continuously improve our products and services, so please feel free to contact our Customer Service Team for assistance with any of your product support needs.

Dacor Customer Service Team
600 Anton Blvd. Suite 1000
Costa Mesa, CA 92626

Telephone: (800) 793-0093
Fax: (626) 403-3130
Hours of Operation: Monday through Friday
6:00 A.M. to 5:00 P.M. Pacific Time

Web Site: www.Dacor.com

Thank you for choosing Dacor for your home. We are a company built by families for families and we are dedicated to serving yours. We are confident that your new Dacor product will deliver a high level of performance and enjoyment for many years to come.

Sincerely,

The Dacor Customer Service Team

© 2007 Dacor, all rights reserved.

Important Safety Instructions

INSTALLER: LEAVE THESE INSTRUCTIONS WITH THE APPLIANCE.

CUSTOMER: READ THIS MANUAL AND THE RANGE USE AND CARE MANUAL COMPLETELY BEFORE USING EITHER APPLIANCE. SAVE THEM FOR FUTURE REFERENCE. THEY CONTAIN IMPORTANT USE AND CARE INFORMATION. KEEP ALL RECEIPTS OR CANCELED CHECKS FOR FUTURE REFERENCE. PROOF OF ORIGINAL PURCHASE DATE IS REQUIRED FOR WARRANTY SERVICE.

For service and warranty information, see page 6.

If you have any questions (other than warranty questions), call:

Dacor Customer Service
(800) 793-0093 (U.S.A. and Canada)
Monday — Friday 6:00 A.M. to 5:00 P.M. Pacific Time

Web site: www.Dacor.com

Have the complete model and serial number for your appliance available. The model and serial number are printed on the appliance data label on the front of the unit. Write these numbers below for future reference.

Model Number _____

Serial Number _____

Date of Purchase _____

Since Dacor continuously improves the quality and performance of our products, we may need to make changes to the appliance without updating this manual.

Important Information About Safety Instructions

The ***Important Safety Instructions*** and warnings in this manual can't cover all possible problems and conditions that can occur. Use common sense and caution when installing, maintaining or operating this appliance.

Always contact the Dacor Customer Service Team about problems or conditions that you don't understand.

Safety Symbols and Labels

⚠ DANGER

Immediate hazards that **WILL** result in severe personal injury or death.

⚠ WARNING

Hazards or unsafe actions that **COULD** result in severe personal injury or death.

⚠ CAUTION

Hazards or unsafe actions that **COULD** result in minor personal injury or property damage.

⚠ DANGER

IMPORTANT: To avoid the possibility of explosion or fire, do not store or use combustible, flammable or explosive vapors and liquids (such as gasoline) inside or in the vicinity of this or any other appliance. Keep items that could explode, such as aerosol cans away from the burners and oven. Do not store flammable or explosive materials in adjacent cabinets or areas.

⚠ WARNING

WARNING - TO REDUCE THE RISK OF FIRE, ELECTRIC SHOCK, OR INJURY TO PERSONS, OBSERVE THE FOLLOWING:

a) Use this unit only in the manner intended by the manufacturer. If you have questions, contact the manufacturer.

b) Before servicing or cleaning unit, switch power off at service panel and lock the service disconnecting means to prevent power from being switched on accidentally. When the service disconnecting means cannot be locked, securely fasten a prominent warning device, such as a tag, to the service panel.

⚠ WARNING

To reduce the risk of a range top grease fire:

a) Never leave surface units unattended at high settings. Boil-overs cause smoking and greasy spillovers that may ignite. Heat oils slowly on low or medium settings.

b) Always turn hood ON when cooking at high heat or when flambéing food (i.e. Crepes Suzette, Cherries Jubilee, Peppercorn Beef Flambe').

c) Clean ventilating fans frequently. Grease should not be allowed to accumulate on fan or filter.

d) Use proper pan size. Always use cookware appropriate for the size of the surface element.

⚠ WARNING

Never allow the filters or vent openings to become blocked or clogged. Do not allow foreign objects, such as cigarettes or napkins, to be sucked into the vent holes.

READ AND SAVE THESE INSTRUCTIONS

Important Safety Instructions

General Safety Precautions

To reduce the risk of fire, electric shock, serious injury or death when using your appliance, follow basic safety precautions, including the following:

⚠ WARNING

- If you receive a damaged product, immediately contact your dealer or builder. Do not install or operate this unit if it has been damaged, dropped, has damaged electrical wiring or is not working properly.
- Use this raised vent only as outlined in this manual. Do not use this unit to vent hazardous or explosive materials or vapors. This unit is not intended for commercial use.
- This raised vent must be installed by a qualified installer according to the accompanying installation instructions. All installation work must be performed in accordance with all applicable codes and standards, including fire-rated construction.
- Do not install, repair or replace any part of this unit unless specifically recommended in the literature accompanying it. A qualified service technician should perform all other service. Contact the Dacor Customer Service Team for examination, repair or adjustment.
- Do not leave children or pets alone or unattended in the area around the range when it is in use. Never allow children to sit or stand on an appliance. Do not let children play with a range or the raised vent.
- Do not store items of interest to children above or around the range.
- Make sure individuals who use the range or cooktop and raised vent are able to operate it properly.
- Never leave a cooktop unattended during use.
- Do not tamper with the controls.
- Clean the filters and all grease-laden surfaces often according to the cleaning instructions in this manual to prevent grease fires and maintain performance.
- DO NOT TOUCH THE SURFACES OF THE RAISED VENT OR RANGE DURING OR IMMEDIATELY AFTER USE.
- Do not allow acids (citrus juices, tomato sauces, etc.) to remain on the unit's surfaces. The finish may stain.
- Do not try to remove heavy spills with a sharp object such as a knife or metal spatula. Sharp objects may scratch the appliance's surfaces.
- Clean this appliance only as instructed in this manual. Use only the cleaners specified.

⚠ WARNING

- Before operating the raised vent, verify that pot handles or other objects will not interfere with the raising and lowering of the vent intake. To prevent spillage and damage to the vent system, turn cookware handles to the side so that they will not be hit when the vent moves to the "up" position.
- Clean liquid spills immediately. If liquid enters the vent intake, then turn off the blower, disconnect the power supply and carefully wipe up all liquid. See the ***Care and Cleaning*** section of this manual.
- Never operate the vent without the filters in place.
- Do not operate the blower if a flame or flare-up develops. In the event of a flame, immediately turn off the blower. Smother the flame or use an appropriate class dry chemical or foam-type fire extinguisher.
- Do not set or rest any objects, including cookware, on top of the vent top cap. Do not interfere with the movement of the vent intake in any way.
- If the vent intake becomes jammed while being raised or lowered, immediately press the Up/Down switch once to stop the intake motion, then disconnect the power supply. Remove the obstruction, then restore power and press the Up/Down switch to continue raising or lowering the intake.

TO REDUCE THE RISK OF INJURY TO PERSONS IN THE EVENT OF A RANGE TOP GREASE FIRE:

- SMOTHER FLAMES with a close-fitting lid, cookie sheet or metal tray, then turn off the burner. BE CAREFUL TO PREVENT BURNS. If the flames do not go out immediately, EVACUATE AND CALL THE FIRE DEPARTMENT.
- NEVER PICK UP A FLAMING PAN - you may be burned.
- DO NOT USE WATER, including wet dish clothes or towels - a violent steam explosion may result.
- Use a fire extinguisher ONLY if:
  - ◇ You have a Class ABC extinguisher, and you already know how to operate it.
  - ◇ The fire is small and contained in the area where it started.
  - ◇ The fire department is being called.
  - ◇ You can fight the fire with your back to an exit.

Operating Your Raised Vent

Operation

⚠ WARNING

If the vent intake becomes jammed while being raised or lowered, immediately press the **UP/DOWN** key once to stop the intake motion, then turn off power at the circuit breaker or fuse box. Remove the obstruction, turn on the power and press the **UP/DOWN** key to continue raising or lowering the intake.

IMPORTANT

The direction of travel of the vent intake cannot be reversed while it is moving. The intake must complete a full up or down cycle before changing directions.

To operate the RV raised vent system when the vent intake is in its lowered position, press and release the **UP/DOWN** key on the control panel. The intake will take approximately ten seconds to reach its uppermost position, where it will stop.

The blower will turn on automatically and run on the high speed setting. Adjust the blower speed by pressing and releasing either the **MEDIUM** or **LOW** keys. The fan speed may be changed whenever desired, as long as the vent intake is in the fully raised position. The blower will not operate if the intake is in any other position.

Turn off the blower in one of two ways: Press and release the **OFF** key or lower the vent by pressing and releasing the **UP/DOWN** key.

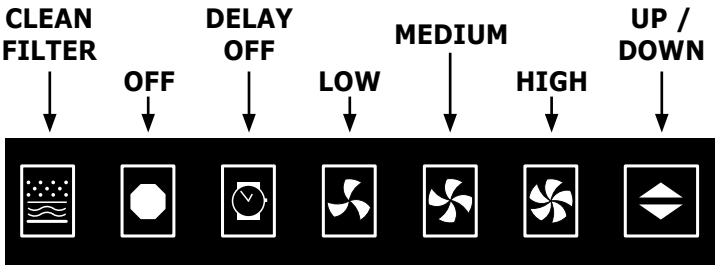

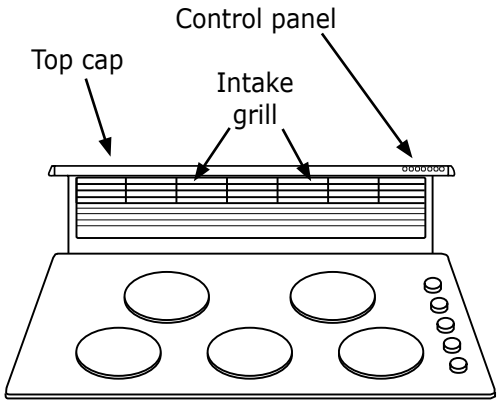

Parts the of Raised Vent - Shown Raised

Appearance varies with model number

Operating Tips:

- Activate the blower a few minutes before starting to cook to establish an airflow pattern in the room.
- Adjust the fan speed according to the volume and weight of the cooking exhaust.
- Reduce the fan speed if the flame on a gas cooktop is being drawn by the vent system. Flame drawing is a normal occurrence with powerful vent systems, especially when installed with short duct runs.
- Always raise the vent intake and activate the blower whenever using the cooktop or range.
- Eliminate air currents in the vent vicinity by shutting nearby windows and doors, turning off ceiling fans and closing adjacent heating and air conditioning outlets.
- Place your largest frying pans, skillets and stock pots on the rear burners whenever possible, as the draft is strongest closest to the vent intake.

Using Delay Off

When the cooking process is complete, use the Delay Off feature to remove any residual smoke and fumes. Turn the Delay Off function by pressing the **DELAY OFF** key while the raised vent is on. The blower will continue to run at the selected fan speed for five minutes, then automatically turn off. The vent intake will remain in the fully raised position after the blower shuts off. The intake may be lowered by pressing and releasing the **UP/DOWN** key at your convenience.

While the blower is operating in Delay Off mode, the blower speed may be adjusted to a different speed by pressing the **HIGH**, **MEDIUM** or **LOW** keys.

To manually cancel the Delay Off function, press and release the **OFF** key or the **UP/DOWN** key. The blower will shut off and if pressing the **UP/DOWN** key, the vent will retract.

Securing the Electronic Keypad

To prevent accidental raising or lowering of the vent, secure the electronic keypad so that the keys (buttons) do not function. This feature is especially helpful when young children are present or when cleaning the vent and surrounding areas.

- While the vent is in the fully lowered or fully raised position, press and the **HIGH** and **LOW** keys at the same time for one second. The electronic controls will secure and the keys will become inoperative. The **HIGH** and **LOW** key indicator lights will illuminate at the same time when the controls are secured.
- To reactivate the controls, press the **HIGH** and **LOW** keys at the same time for one second. The **HIGH** and **LOW** key indicator lights will go out, indicating that the control panel is active again.

Care and Cleaning

⚠ WARNING

- Clean the vent only in the manner specified.
- To avoid dangerous fumes or damage to your vent's surfaces, use only the types of cleaning solutions specified in this manual.
- To avoid personal injury, turn off the range and vent and make sure all surrounding surfaces are cool before cleaning.
- Always wipe stainless steel (silver colored) surfaces with the grain. To prevent scratching, do not use abrasive cleaners or scrubbers on stainless steel surfaces.
- To avoid damage to the fan, do not reinstall damaged filters.
- To avoid damage, do not clean the filters in a dishwasher.

Grill Cleaning

- Secure the keypad (see facing page).
- Remove the grill with the vent in the raised position. Gently grasp the grill on both ends. Lift it up, then rotate the bottom of the grill out of the lower groove. Clean it regularly. Hand wash it in hot water with a mild detergent solution. Set the grill on a flat surface and wipe only in the direction of the grill grain.
- Do not use any cleaners containing ammonia as this will damage the anodized aluminum finish. A soft toothbrush or nylon bristle dish brush may be used to clean the grill grooves.

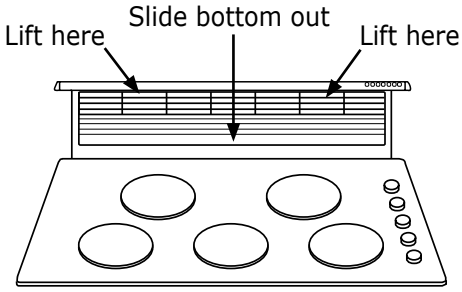

Removing the Grill

- After cleaning, reinstall the grill. Align the left and right edges of the grill with the vertical grill guides and insert the upper edge of the grill into the slot in the top cap. Pivot and drop the bottom of the grill into the lower locating slot.

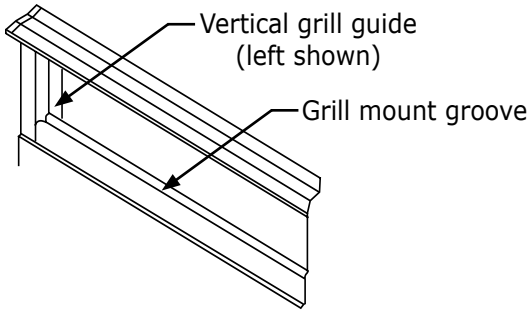

Location of Mounting Groove

Cleaning the Filters

Clean the filters and surrounding areas regularly to prevent grease build-up.

The **CLEAN FILTER** key indicator light will illuminate after 40 hours of blower use to remind you to clean the filters (push the **CLEAN FILTER** key to reset). The filters may need to be cleaned more often based upon the type and amount of cooking. Check the filters regularly.

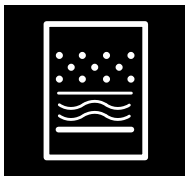

CLEAN FILTER

To clean the filters:

- Raise the vent to the "up" position to clean the filters.
- Remove the grill as described in the ***Grill Cleaning*** section.
- The filters are positioned side by side inside the vent intake. When properly installed, the tops of the filters lean against the rear intake panel and the filter bottoms rest in a slot attached to the front intake panel. Remove one filter at a time by gently grasping the top center of the filter and lifting it up and out.

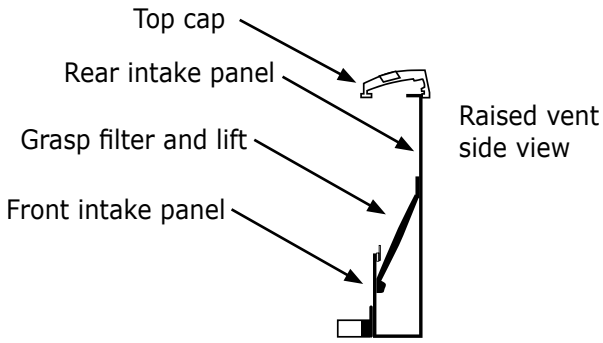

- Clean the filters by hand washing them in hot water with a mild detergent solution. Clean the intake panel also (see following page).
- Make sure the filters are dry before carefully reinstalling them.
- Reinstall the intake grill.

Care and Cleaning

Cleaning the Intake Panel

The intake panels accumulate grease over time and should be cleaned whenever the filters are washed.

- After removing the grill and filters, wipe all external and internal aluminum surfaces with a sponge or cloth moistened with a mild detergent. Rinse off with water. Remove all moisture by wiping with a soft, dry polishing cloth. Always wipe in the direction of the grain. Do not use any abrasive substances on the intake panels, as this may permanently mar the finish.
- Dry and reinstall all components prior to operating the vent system.

Cleaning the Electronic Keypad

Do not use any abrasive materials to clean the keypad.

- The keypad and surrounding the plastic bezel should be gently wiped with a lightly dampened sponge or cloth. Any material that becomes lodged between the buttons and the surrounding bezel may be removed by carefully dabbing with a cotton swab or the edge of a cloth. Use the above method to prevent the buttons from sticking.
- After cleaning, immediately dry the keypad area with a soft cloth.

Cleaning the Top Cap

Clean the top cap only when the intake vent is in the lowered position.

The top cap and end caps may have painted finishes (depending on the model) that will scratch or stain if cleaned with abrasive materials or harsh chemicals.

- Gently wipe them with a sponge or soft cloth moistened in a mild detergent solution whenever they becomes soiled. Avoid introduction of moisture into the electronic keypad area.

Before You Call for Service

Problem Solution Guide

PROBLEM	MAY BE CAUSED BY	WHAT TO DO
Nothing works.	Raised vent not connected to electrical power.	Turn on power at circuit breaker or fuse box. Check for tripped breaker or blown fuse.
	Power outage.	Contact power company.
	Keypad is deactivated.	Reactivate control panel: press **HIGH** and **LOW** keys at the same time. Hold down for one second.
Vent intake raises or lowers partially then stops.	An obstruction is interfering with the vent intake movement.	Immediately press **UP/DOWN** key, then disconnect the power plug. Remove the obstruction. Reconnect the vent power plug and press Up/Down key to raise or lower intake.
Gas flame is being pulled by draw of vent.	Short duct run or high output of system make ventilating force very strong.	Reduce blower speed to a lower setting.
Clean filter symbol is lit.	Blower has operated for over 40 hours.	Inspect and clean filters. See ***Care and Cleaning*** section.

Warranty and Service

Getting Help

Before you request service, please review the ***Before You Call for Service*** section of this manual starting on page 5. If you have performed the checks in the ***Problem Solution Guide*** and the problem has not been remedied, please contact us at one of the numbers below. Prior to requesting service, it is helpful to be familiar with the warranty terms and conditions listed in the ***Warranty*** section on this page.

For warranty repairs, call:

Dacor Distinctive Service

Phone: (877) 337-3226 (U.S.A. and Canada)
Monday — Friday 6:00 A.M. to 4:00 P.M. Pacific Time

For non-warranty repairs, call:

Dacor Customer Service

Phone: (800) 793-0093 (U.S.A. and Canada)
Business Hours: 6:00 A.M. - 5:00 P.M. Pacific Time

Contact us through our web site at:

Web site: www.Dacor.com

At Dacor, we believe that our quality of service equals that of our product. Should your experience with our service network or product be different, please contact our Customer Service Team and share your encounter with us. We will do our utmost to resolve the situation for you and deliver on our Dacor promise.

If you need anything clarified, just let us know.

Warranty

What Is Covered

CERTIFICATE OF WARRANTIES: DACOR RAISED VENTS

WITHIN THE FIFTY STATES OF THE U.S.A., THE DISTRICT OF COLUMBIA, AND CANADA*:

FULL ONE-YEAR WARRANTY

If your DACOR product fails to function within one year of the original date of purchase, due to a defect in material or workmanship, DACOR will remedy the defect without charge to you or subsequent users. The owner must provide proof of purchase upon request, and have the appliance accessible for service.

Warranty is null and void if non-CSA approved product is transported from the U.S.

OUTSIDE THE FIFTY STATES OF THE U.S.A., THE DISTRICT OF COLUMBIA, AND CANADA:

LIMITED FIRST YEAR WARRANTY

If your DACOR product fails to function within one year of the original date of purchase, due to a defect in material or workmanship, DACOR will furnish a new part, F.O.B. factory, to replace the defective part. All delivery, installation, and labor costs are the responsibility of the purchaser. The owner must provide proof of purchase, upon request, and have the appliance accessible for service.

What Is Not Covered

- Service calls to educate the customer in the proper use and care of the product.
- Failure of the product when used for commercial, business, rental or any application other than for residential consumer use.
- Replacement of house fuses or fuse boxes, or resetting of circuit breakers.
- Damage to the product caused by accident, fire, flood or other acts of God.
- Breakage, discoloration or damage to glass, metal surfaces, plastic components, trim, paint or other cosmetic finish, caused by improper usage or care, abuse or neglect.

THE REMEDIES PROVIDED FOR IN THE ABOVE EXPRESS WARRANTIES ARE THE SOLE AND EXCLUSIVE REMEDIES. THEREFORE, NO OTHER EXPRESS WARRANTIES ARE MADE, AND OUTSIDE THE FIFTY STATES OF THE UNITED STATES, THE DISTRICT OF COLUMBIA, AND CANADA, ALL IMPLIED WARRANTIES, INCLUDING BUT NOT LIMITED TO, ANY IMPLIED WARRANTY OF MERCHANTABILITY OR FITNESS FOR A PARTICULAR USE OR PURPOSE, ARE LIMITED IN DURATION TO ONE YEAR FROM THE DATE OF ORIGINAL PURCHASE. IN NO EVENT SHALL DACOR BE LIABLE FOR INCIDENTAL EXPENSE OR CONSEQUENTIAL DAMAGES. NO WARRANTIES, EXPRESS OR IMPLIED, ARE MADE TO ANY BUYER FOR RESALE.

Some states do not allow limitations on how long an implied warranty lasts, or do not allow the exclusion or limitation of inconsequential damages, so the above limitations or exclusions may not apply to you. This warranty gives you specific legal rights, and you may also have other rights that vary from state to state.

Notes

Notes

fold here

NO POSTAGE
NECESSARY
IF MAILED
IN THE
UNITED STATES

BUSINESS REPLY MAIL

FIRST-CLASS MAIL PERMIT NO. 4507 DIAMOND BAR CA

POSTAGE WILL BE PAID BY ADDRESSEE

DACOR
ATTN: WARRANTY PROCESSING DEPT
PO BOX 6532
DIAMOND BAR CA 91765-9861

dacor
The Life of the Kitchen.®

Please visit www.Dacor.com to activate your warranty online.

WARRANTY INFORMATION

IMPORTANT:

Your warranty will not be activated until you activate it online or return this form to Dacor. If you have purchased more than one Dacor product, please return all forms in one envelope or activate the warranty for each product online.

Please rest assured that under no conditions will Dacor sell your name or any of the information on this form for mailing list purposes. We are very grateful that you have chosen Dacor products for your home and do not consider the sale of such information to be a proper way of expressing our gratitude!

cut here

Owner's Name: _____
Last (Please Print or Type) First Middle

Street: _____

City: _____ State: _____ Zip: _____

Purchase Date: _____ Email: _____ Telephone: _____

Dealer: _____

City: _____ State: _____ Zip: _____

Your willingness to take a few seconds to fill in the section below will be sincerely appreciated. Thank you.

1. How were you **first** exposed to Dacor products? (Please check one only.)

- ❑ A. T.V. Cooking Show
- ❑ B. Magazine
- ❑ C. Appliance Dealer Showroom
- ❑ D. Kitchen Dealer Showroom
- ❑ E. Home Show
- ❑ F Builder
- ❑ G. Architect/Designer
- ❑ H. Another Dacor Owner
- ❑ I. Model Home
- ❑ J. Other _____

2. Where did you buy your Dacor appliances?

- ❑ A. Appliance Dealer
- ❑ B. Kitchen Dealer
- ❑ C. Builder Supplier
- ❑ D. Builder
- ❑ E. Other _____

3. For what purpose was the product purchased?

- ❑ A. Replacement ***only***
- ❑ B. Part of a Remodel
- ❑ C. New Home
- ❑ D. Other _____

4. What is your household income?

- ❑ A. Under $75,000
- ❑ B. $75,000 – $100,000
- ❑ C. $100,000 – $150,000
- ❑ D. $150,000 – $200,000
- ❑ E. $200,000 – $250,000
- ❑ F. Over $250,000

5. What other brands of appliances do you have in your kitchen?

A. Cooktop _____ C. Dishwasher _____
B. Oven _____ D. Refrigerator _____

cut here

6. Would you buy or recommend another Dacor product?

❑ Yes ❑ No

Comments: _____

_____

_____

Thank you very much for your assistance. The information you have provided will be extremely valuable in helping us plan for the future and giving you the support you deserve.

Web site: www.Dacor.com
Corporate phone: (800) 793-0093